fiber cable jet

# PRODUCT CATALOGUE



2021

www.kosmak.com

MANUFACTURED BY

KÖSMAK

# Selection Chart

| Capacity | Hidro-FOK | FOK | Mini FOK | MiniFOK PLUS | Mikro FOK | Drill-FOK |
|---|---|---|---|---|---|---|
| Cable Diameter (mm) | 9 -25 | 9-22 | 2,5-16 | 2,5 -16 | 3 -7 | 1,5-10 |
| Tube Diameter (mm) | 12 -50 | 12-50 | 12-50 | 12-50 | 6-20 | 3-16 |
| Air Pressure Recom mendation (Bar) | 12 | 12 | 12 | 12 | 12 | 12 |
| Air Flow Rate Recom mendation (m3) | 10,5-12 | 10,5-12 | 10,5-12 | 10,5-12 | 1,5-3 | 1,5-3 |
| Driver | 2pcs Hydraulic Motor | Pneumatic Motor 2pcs | Pneumatic Motor 1pcs | Pneumatic Motor 1pcs | Pneumatic Motor 1pcs | Drilling Tool |
| Pusher | Chain Belt/ Pallet | Chain Belt/ Pallet | Belt | Belt | Wheel | Roller |
| Dimension (mm) | 740 x 1200 x 740 | 610x 440x 380 | 470x 420x 620 | 520x 390x 720 | 420x 390x 510 | 280x 320x 270 |
| Gross Weight (kg) | 170 | 49 | 47 | 52 | 28 | 10 |

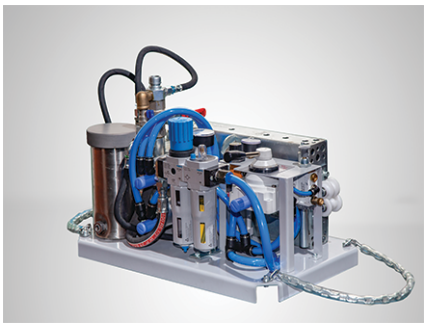



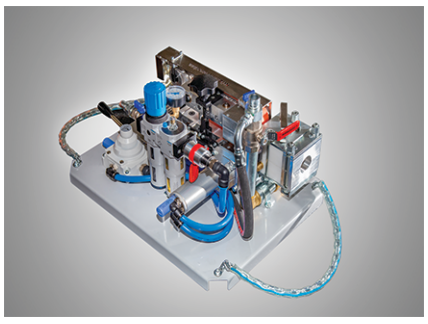

# FOK

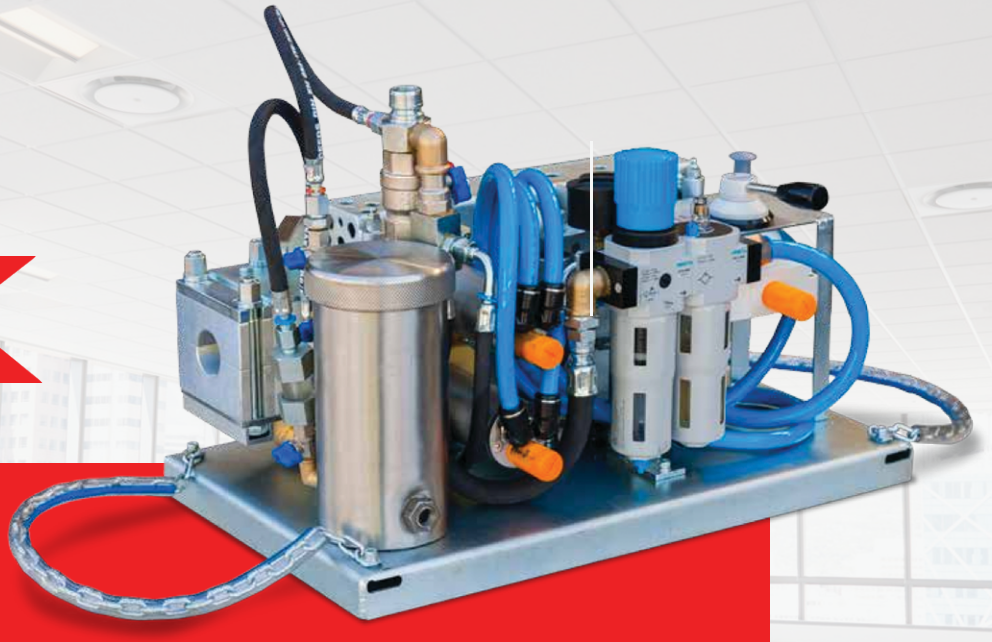

FOK Cable Blowing Machine provides an excellent flexibility and compact design to the users offering a complete solution. Capable of installing the cables Fiber optic cable and micro duct. In a range of Ø 9 to 22 mm diameter and duct outer diameter (OD)may vary 20mm to 50 mm.FOK Machine is engineered for blowing Fiber optic cables in preinstalled ducts.This multifunctional machine is easy to use for the installation of cables and micro-ducts by air and covers a wide range of cable diameters.

FOK Machine has a significant productivity and it considerably increases your labor's production capacity. A special and carefully designed pallet system assuring an excellent cable drip and decrease the damage risk. Clamping system adjust the cable outer diameter fluctuation/tolerance. In addition to that, its high-techengineered design and structure improve blowing performance. Each and every part of machine areengineered and produced to meet and exceed the expectation of customer requirements.

FOK Machine is a Fiber optic cable blowing machine designed to blow cables into preinstalled telecommunication ducts and micro ducts by using of compressed air. Having 3 pallet options as 9-14mm, 14-18mm and 18-22mm to blow the cables having min 9mm to max. 22mm with a speed of 80m/min. Duct diameter can be in the range of 20 mm to 50 mm. Special pallet design will allow you to install your cables under muddy field conditions and Cable Blowing Power will not be decreased. You can set cable installing speed and direction with control valve.
A wisely designed exit box will supply highly productive leading for pressured air into telecom ducts. Quick air connection makes your business easier with an easy plug-in method. You can transfer lubricant oil onto pre-installed duct with the shock lubrication system to reduce friction between duct and cables. Two air motors will ensure to continuous high effective cable blowing power. You are capable of switching on or off the air entering into telecom ducts with guidance of valves. Festo Lubricant system takes off moisture of pressured air which comes from compressor and supplies continuous lubricate for air motors.

fiber cable jet

# FOK
# CONTENT

## CONSISTING OF

- 1set (2pcs) of Pallet (1)
- 1pcs Duct Lubricant System (2)
- 2pcs Air Motor (3)
- 1pcs Air Lubrication System (4)
- 1set Cable Aligning Parts (5)

## WITH OUT

- Air Cooler
- Lubricant Oil
- Air Compressor

## WITH

- 1pcs Operator Guide
- 1pcs Cable Inserts(7)
- 1set Duct Inserts(8)
- 1set Blue Nutring (9)
- 2m Black Rubber O-Ring (10)
- 1pcs Protected Wooden Case with holder (11)
- 1pcs Quick Insert Air Jack (12)
- 1set Tool Kit (13)
- 1pcs Box for plastic tools

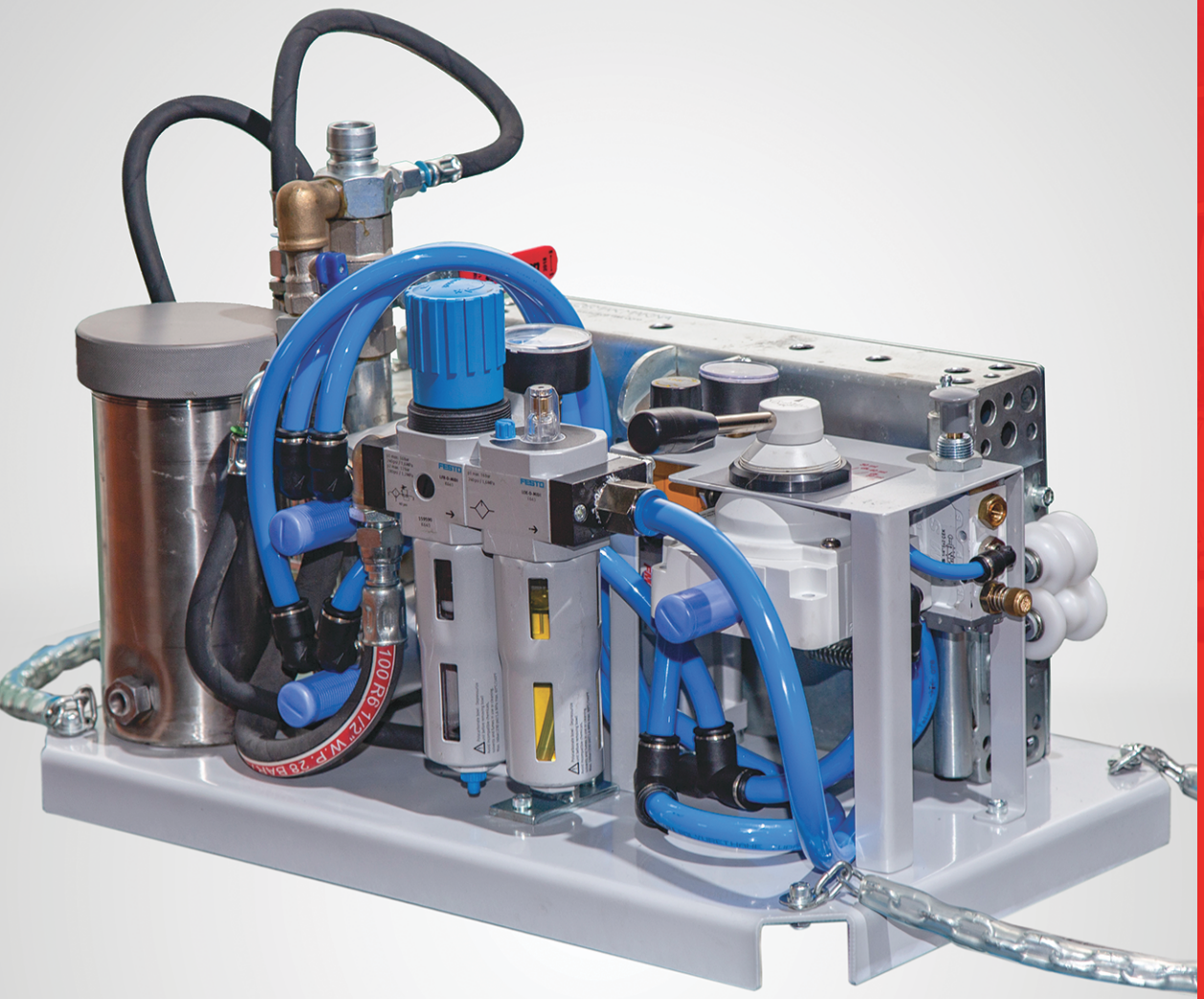

# TECHNICAL DATA

## FOK

| | |
|---|---|
| Standard version | 2pcs of pneumatic motor drive |
| Type | FOK |
| Cable dia. [mm] | 9-22 |
| Pallet Options (mm) | 9-13 / 14-18 / 19-22 |
| Duct OD [mm] | 20-50 |
| Drive unit | Pneumatic |
| Max. air consumption of 1pcs of motor [m3/min] | 3m 3/ min (at 6 bar) |
| Torque Nm – Max. Power | 8.5 Nm x 2 Pieces |
| Max. distance to blow at once (Cable Dia. 12mm – Duct Dia. 40mm) (m) | 3000 |
| Linear pressure on cable [N/cm] | 0-101 |
| Max. speed [m/min] | 80 |
| Max. air pressure [bar] | 16 |
| Max. water pressure [bar] | 23 |
| Dimension of apparatus with case l x w x h [mm] | 380 x 610 x 440 |
| Dimension of tools and accessories case l x w x h [mm] | 380 x 610 x 440 |
| Weight of machine [kg] | 40 |
| Total weight [kg] | 49 |

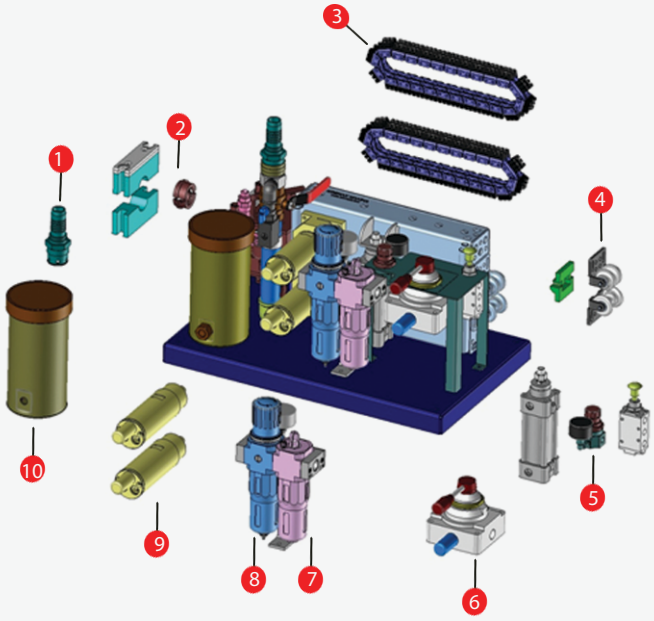


## FOK MACHINE PARTS

Quick Pipe Conneciton .1

Easy Duct Connection .2

Rubber coated chain for pushing cable without skidding .3

Cable aligning parts to blow cable ahead .4

Pressure regulator with piston group to regulate pushing force on cable and tomake up&down movement automaticaly .5

Direction control valve for pushing and pulling fiberoptic cable .6

Air lubricating unit to lubricate air motors during cable blowing .7

Pressure regulating unit to regulate air pressure on air motors .8

Two air motors pushing cable together.9

Duct lubrication unit to lubricate duct during cable blowing .10

# FOK
# ACCESSORIES

## COMPRESSOR CAPACITY RECOMMENDATION

| | |
|---|---|
| Efficiency | 10,5 m3/min |
| Working pressure | 12bars |

These are minimum compressor requirements. You may use higher capacity of compressor which can increase the effectiveness. You can overcome the handicap of improperly installed ducts.

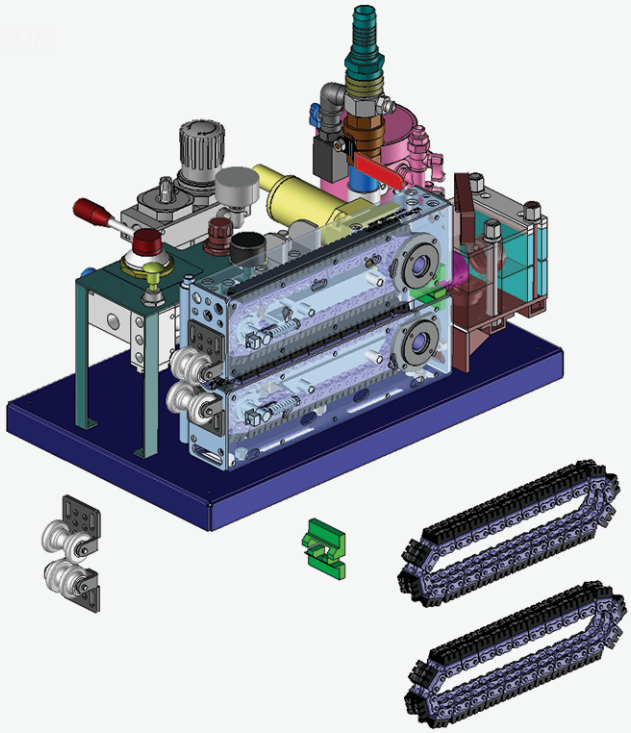

## PALLET, CABLE ALIGNING AND DUCTOPTIONS

| Pallet Set (mm) | Cable Aligning Tool &Nutrings (mm) | Duct Connection Tool (mm) |
|---|---|---|
| P1: 9-13 | C1: 9-13 | D: 20 |
| P2: 14-18 | C2: 14-18 | D: 32 |
| P3: 19-22 | C3: 19-22 | D: 40 |
| | | D: 50 |

## ORDERING CODE

| FOK | P1 | C1 | D1 |
|---|---|---|---|
| Machine | Pallet Set | Cable Aligning Tool&Nutrings | Duct Connection Tool |
| FOK | P1 | C1 | D10 |
| | P2 | C2 | D20 |
| | P3 | C3 | D32 |
| | | | D40 |
| | | | D50 |
| | MultipleOrdering | MultipleOrdering | MultipleOrdering |
| | P1+2+3 | C1+2+3 | D10+20+32 |

1 set of Pallet - 1 Set of Cable Aligning Tool + 1pcs Duct Connection Tool is included.

# HIDRO-FOK

Hidro-FOKCable Blowing Machine is designed and properly engineered to blow Fiber Optic Cables and Micro tubes in HDPE ducts. This fiber optic cable blowing machine is equipped with Hydraulic motors. Hidro-FOK is working with hydraulic power unit. Micro Tubes can be blown any quantity of Micro Duct with the suitable pallet.Hydraulic motors are making Hidro-FOKthe most powerfull cable blowing machine among our machines. Hydraulic Motor are much stronger compared to Air Motor. Hidro-FOK machine is engineered to get highly effective and very safe method of fiber optic cable installation.

With its compact and dynamic outfit blowing machine, you can handle cables. Hydraulic typecable blower machine is an ideal choise for location our city (rural area) and also for long haul cable installation.A best designed machine which runs on hydraulic power, a heavy duty model hydraulic power pack. You need to change palette group and some parts to modify machine from tube to cable blowing machine or reverse. Hydraulic Power is the equipment to be used with Hidro-FOK Machine.

Capable of installing the Fiber Optic Cables & Micro Ducts -Fiber optic cable and microduct-. For cables Ø 9 to 25 mm and ducts OD 20 to 60 mm. Its high effectiveness significantly increases daily production. The pallet drive system ensures excellent cable grip without damage and the Pneumatic system absorbs cable diameter tolerances. In addition to that, its high tech engineered design and structure improve blowing performance. Each and every part of machine are engineered and produced to meet and exceed the expectation of customer requirements.

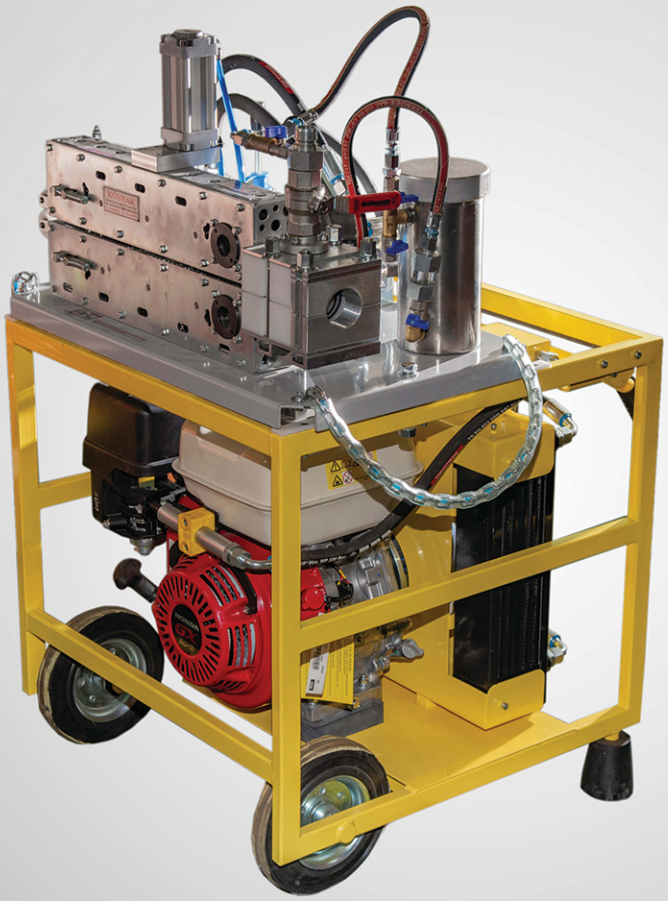

Hidro-FOK Machine is a Fiber optic cable blowing machine designed to blow cables into preinstalled telecommunication ducts and micro ducts by using of compressed air. Having 3 pallet options as 9-13mm, 14-18mm and and 189-252mm to blow the cables having min 9mm to max. 19-25 mm with a speed of 80m/min. Special pallet design will allow you to install your cablesunder muddy field conditions and Cable Blowing Power will not be decreased. You can set cable installing speed and direction with hydraulic control valve. A wisely designed exit box will suppy highly productive leading for pressured air into telecom ducts. Quick air connection makes your business easier with an easy plug in method. You can transfer lubricant oil onto pre-installed duct with the shock lubrication system to reduce friction between duct and cables. Your installing power never decrease with two hydraulic motors. You are capable ofswitching on or off the air entering into telecom ducts with guidence of valves.

# HIDRO-FOK

# CONTENT

## CONSISTING OF

- 1set (2pcs) of Pallet
- 1pcs Duct Lubricant System
- 2pcs Hyraulic Motor
- 1pcs Hydraulic Power Unit with Honda GX-270 Benzine Engine
- 1pcs Exit Box

## WITH OUT

- Air Cooler
- Lubricant Oil
- Air Compressor

## WITH

- 1pcs Operator Guide
- 1pcs Cable Inserts
- 1set Duct Inserts
- 1set Blue Nutring
- 2m Black Rubber O-Ring
- 1pcs Protected Wooden Case with holder
- 1pcs Quick Insert Air Jack
- 1set Tool Kit
- 1pcs Box for plastic tools

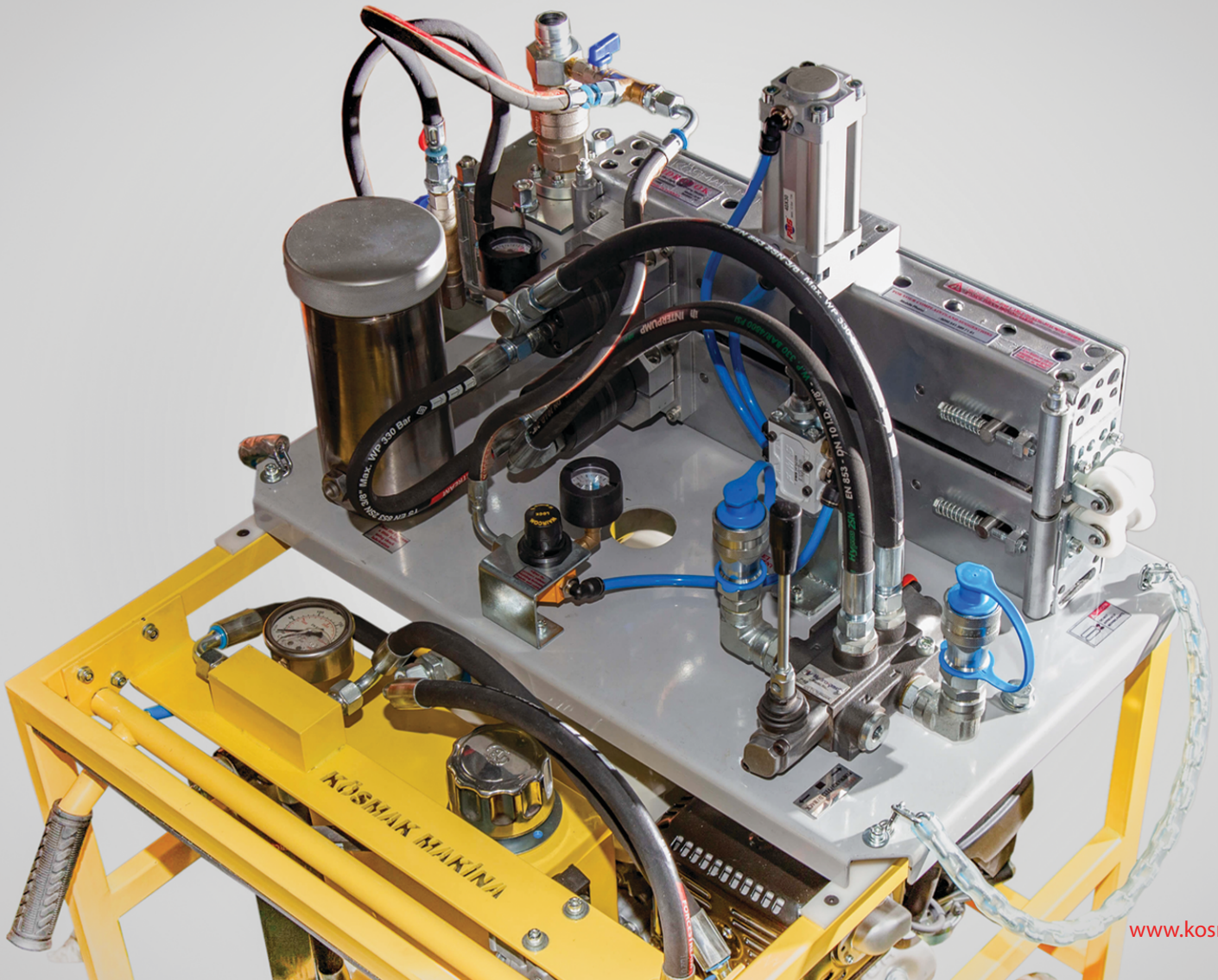

# TECHNICAL DATA

| HIDRO-FOK | |
|---|---|
| Standard version | 2pcs of hydraulicmotor drive |
| Type | Hidro-FOK |
| Pallet Options (mm) | 9-13 / 14-18 / 19-25 |
| Cable dia. [mm] | 9-25 |
| Duct OD [mm] | 20-60 |
| Drive unit | Hydraulic Power Unit |
| Max. oilcirculation of 1pcs of motor [liter/min] | 20 |
| Torque Nm – Max. Power | 80 |
| Distance to blow at once max. (Cable Dia. 12mm – Duct Dia. 40mm) (m) | 3000 |
| Linear pressure on cable [N/cm] | 0-101 |
| Max. speed [m/min] | 80 |
| Max. air pressure [bar] | 16 |
| Max. water pressure [bar] | 23 |
| **Hydraulic Power Unit + Cable Blowing Machine** | |
| Dimension of apparatus with case l x w x h [mm] | 740 x 1200 x 740 |
| Total weight [kg] | 170 |

# MACHINE PARTS

## Hydraullic Fiber Blowing Machine & Hydraullic Power Unit

1. Easy Duct Connection.
2. Quick Pipe Connection.
3. Rubber coated chain for pushing cable without skidding.
4. Cable aligning parts.
5. Pressure regulator with piston group to regulate pushing force on cable and to make up&down movement automaticaly.
6. Direction control valve for pushing fiberoptic cable forward ot backward
7. 2 hydraulic motors to push the cable.
8. Duct lubrication unit to lubricate duct during cable blowing

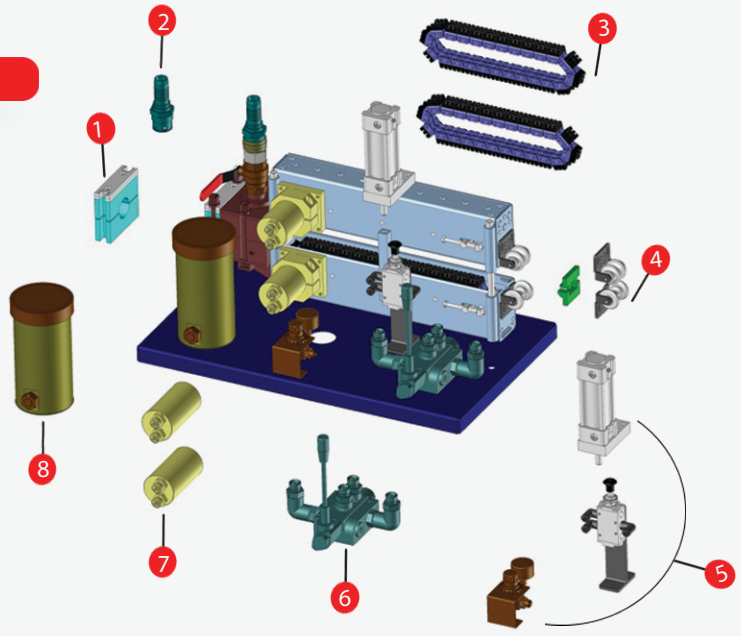

# HIDRO-FOK

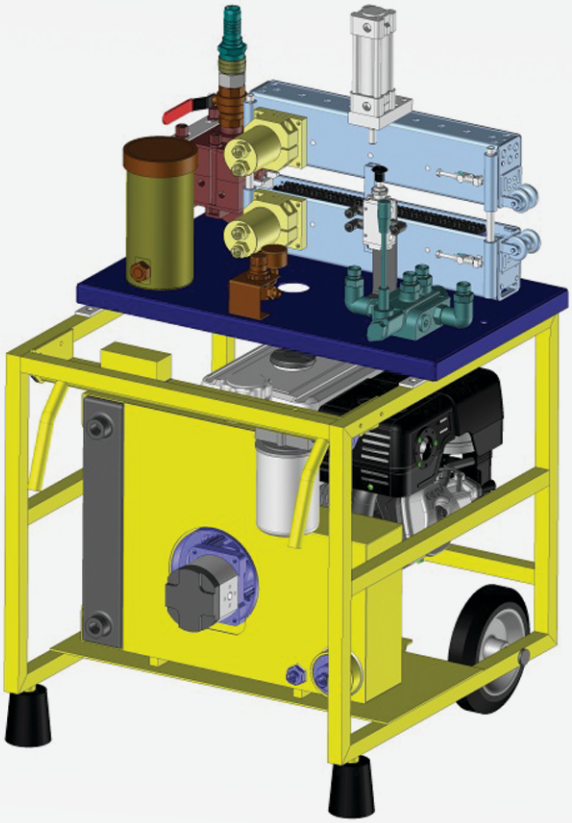

Hydraulic Fiber
Blowing Machine

Hydraulic
Power Unit

## THE HYDRAULIC POWER UNIT PARTS



Honda Engine
(Gasoline)

Cooler Radiator

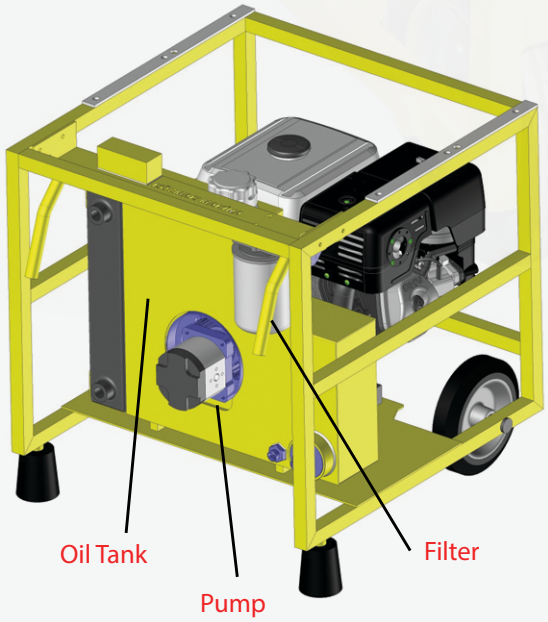

# HIDRO-FOK ACCESSORIES

## COMPRESSOR CAPACITY RECOMMENDATION

| | |
|---|---|
| Efficiency | 10,5 m3/min |
| Working pressure | 12 bar |

These are minimum compressor requirements. You may use higher capacity of compressor which can increase the effectiveness. You can overcome the handicap of inproperly installed ducts.

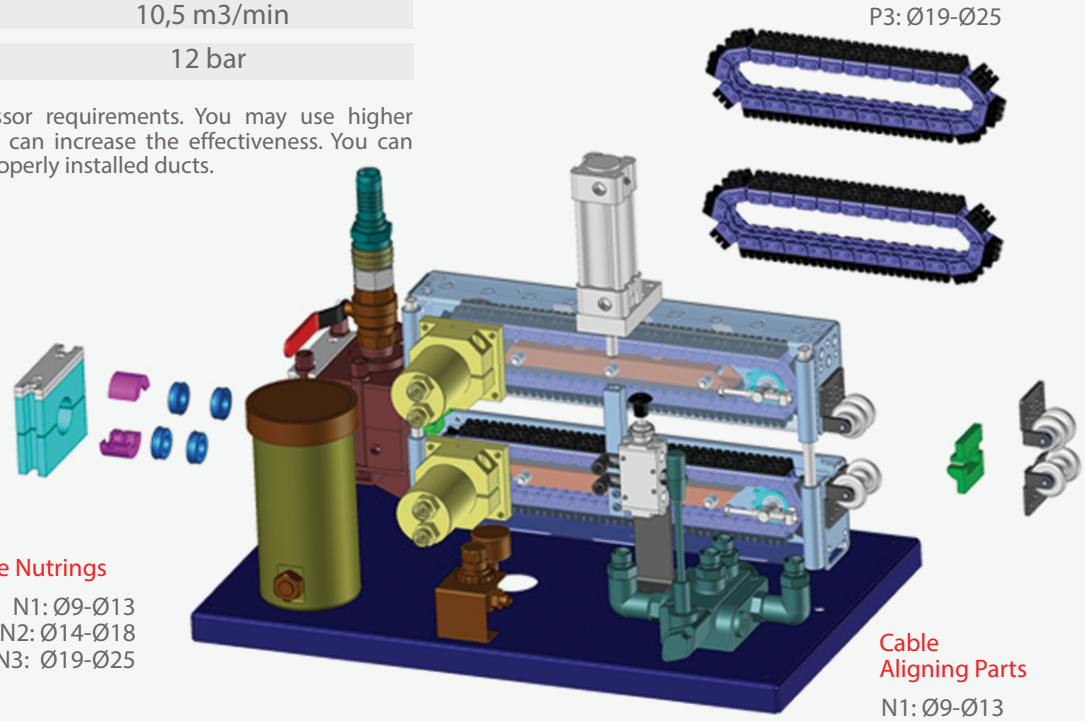

Pallet Set
P1: Ø9-Ø13
P2: Ø14-Ø18
P3: Ø19-Ø25

Duct Connection Tool
D1: Ø20 , D2: Ø32
D3: Ø40 ,D4: Ø50

Cable Nutrings
N1: Ø9-Ø13
N2: Ø14-Ø18
N3: Ø19-Ø25

Cable Aligning Parts
N1: Ø9-Ø13
N2: Ø14-Ø18
N3: Ø19-Ø25

## PALLET, CABLE ALIGNING AND DUCT OPTIONS

| Pallet Set (mm) | Cable Aligning Tool (mm) | Duct Connection Tool (mm) |
|---|---|---|
| P1: 9-13 | C1: 9-13 | D1: 20 |
| P2: 14-18 | C2: 14-18 | D2: 32 |
| P3: 19-25 | C3: 19-25 | D3: 40 |
| | | D4: 50 |

## ORDERING CODE

| Hidro-FOK | P1 | C1 | D32 |
|---|---|---|---|
| Machine | Pallet Set | Cable Aligning Tool | Duct Connection Tool |
| Hidro-FOK | P1 | C1 | D20 |
| | P2 | C2 | D32 |
| | P3 | C3 | D40 |
| Multiple Ordering | Multiple Ordering | Multiple Ordering | D50 |
| P1+2+3 | C1+2+3 | D10+20+32 | |

1 set of Pallet - 1 Set of Cable Aligning Tool + 1pcs Duct Connection Tool is included.

fiber cable jet



# MINI FOK

Mini-FOK Cable Blowing Machine provides an excellent flexibility and compact design to the users offering a complete solution. Allows you to blow the cables -micro type cable and micro-duct-.Mini-FOK Cable Blowing Machine can install the cables in a range of Ø 2,5 to 16 mm and various ducts outer diameters7 to 40mm are available upon request. Customized Duct diameter can be made upon request. Mini-FOK is engineered for blowing telecommunication cables or micro ducts in preinstalled ducts.This multifunctional machine is easy to use for the installation of cables, micro-cables or micro-ducts by air and covers a wide range of cable diameters.

Mini-FOK Machine has a significant productivity and it considerably increases your labor's production capacity.
A special and carefully designed pallet system assuring an excellent cable drip and decrease the damage risk. Clamping system adjust the cable outer diameter fluctuation/tolerance. In addition to that, its high-techengineered design and structure improve blowing performance. Each part of machineisengineered and produced to meet and exceed the expectation of customer requirements. Mini-FOK it is equipped with a distance and speed indicator.

Mini-FOK is a Fiber optic cable blowing machine designed to blow cables into telecommunication ducts and micro ducts by using of compressed air. Having 3 pallet options as 2,5-4mm, 5-8mm, 9-12mm and 13-16mm to blow the cables having min. 2,5mm to max. 16mm. This fiber optic cable blowing machine works with one air motor for blowing the cables and tubes. Due to 1 air motor,it can perfectly blow fiber optic cables into ducts. So, it's a perfect choice If fiber optic cable diameter is 6mm and duct diameter is 16mm.

Special pallet design will allow you to install your cables under muddy field conditions and Cable Blowing Power will not be decreased. You can set cable installing speed and direction with control valve. A wisely designed exit box will supply highly productive leading for pressured air into telecom ducts. Quick air connection makes your business easier with an easy plug-in method. It's completely Made in Turkey with international standards.

Single air motors will ensure to continuous high effective cable blowing power. You can switch on or off the air entering telecom ducts with guidance of valves. Festo Lubricant system takes off moisture of pressured air which comes from compressor and supplies continuous lubricate for air motors.

# MINI-FOK
# CONTENT

## CONSISTING OF

- 1set (2pcs) of Belt
- 1pcs MechanicalMeter Indicator
- 1pcs Air Motor
- 1set Cable Aligning Parts
- 1pcs Direction Valve Backward and Forward Directions

## WITH

- 1pcs Operator Guide
- 1pcs Cable Inserts: Options 4mm to 8mm
- 1set Duct Inserts
- Up to 30pcs Blue Nutring (6pcs per Cable Dia)
- 2m Black Rubber O-Ring
- 1pcs Protected Wooden Case with holder
- 1pcs Quick Insert Air Jack
- 1set Tool Kit
- 1pcs Box for plastic tools

## WITH OUT

- Air Cooler
- Lubricant Oil
- Air Compressor

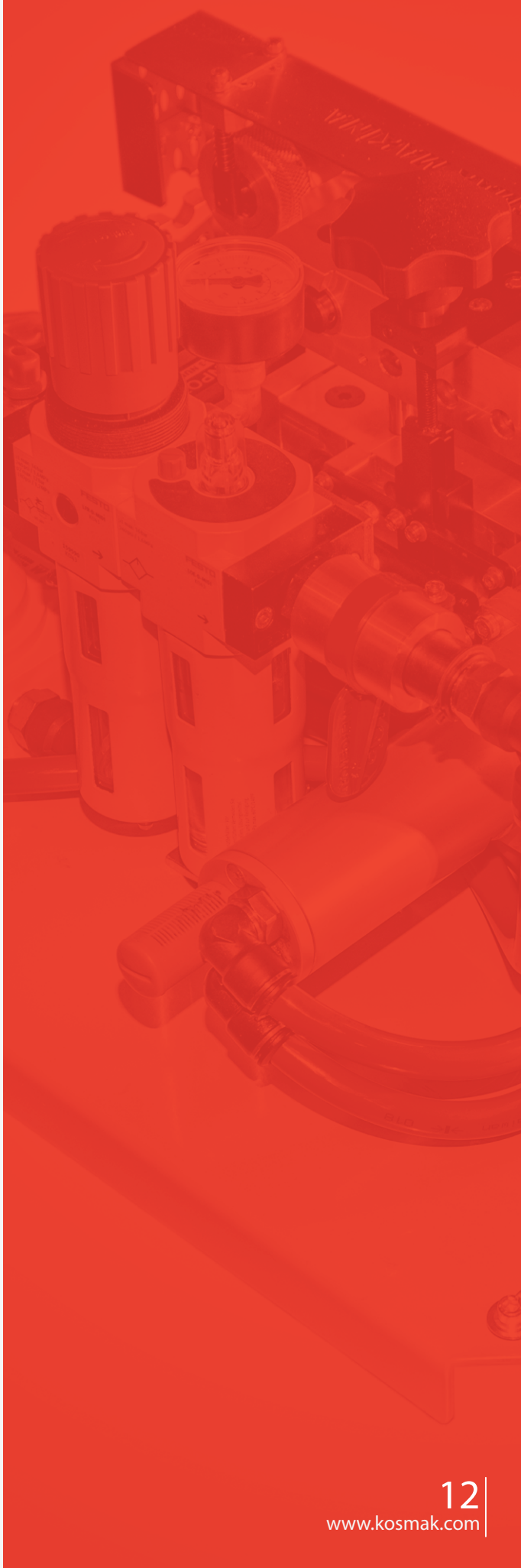

# TECHNICAL DATA

## MINI-FOK

| | |
|---|---|
| Standard version | 1pcs of pneumatic motor drive |
| Type | Mini-FOK |
| Pallet Options (mm) | 2,5-4 / 5-8 / 9-12 / 13-16 |
| Cable dia. [mm] | 2,5-16 |
| Duct OD [mm] | 7-40 |
| Drive unit | Pneumatic |
| Max. air circulation of motor [m3/min] | 1.5 (at 6 bar) |
| Torque Nm – Max. Power | 8,5 |
| Max. distance to blow at once (Cable Dia. 6mm – Duct Dia. 16mm) (m) | 1500 |
| Linear pressure on cable [N/cm] | 0-101 |
| Max. speed [m/min] | 80 |
| Max. air pressure [bar] | 16 |
| Max. water pressure [bar] | 23 |
| Dimension of tools and accessories case l x w x h [mm] | 470x420x620 |
| Total weight [kg] | 47 |

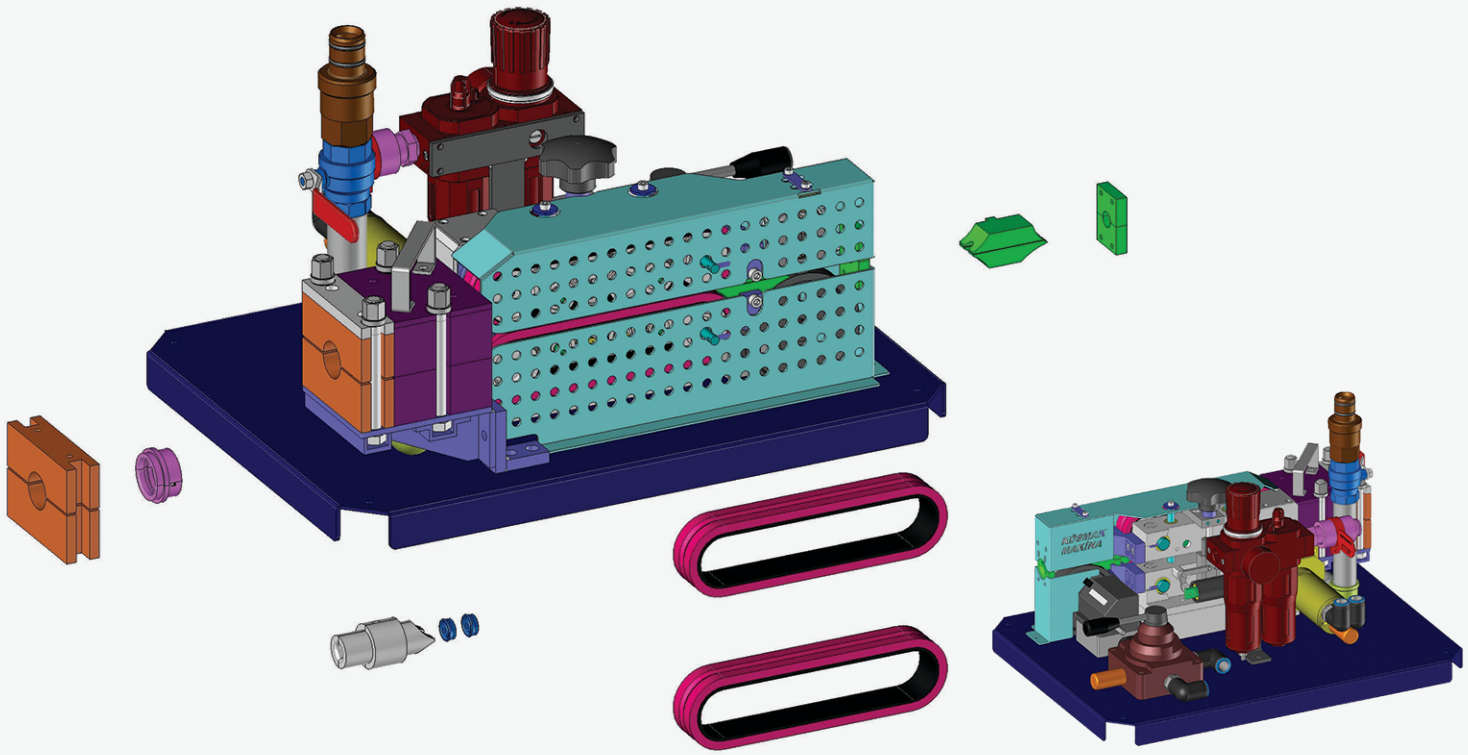

## COMPRESSOR CAPACITY RECOMMENDATION

| | |
|---|---|
| Efficiency | 1 m 3/min |
| Working pressure | 12bars |

These are minimum compressor requirements up to Duct Dia. 20mm.
You may use higher capacity of compressor which can increase the effectiveness.
You can overcome the handicap of improperly installed ducts.

## PALLET, CABLE ALIGNING AND DUCT OPTIONS

| Pallet Set (mm) | Cable Aligning Tool &Nutrings (mm) | Duct Connection Tool (mm) |
|---|---|---|
| P1: 2,5-4 | C1: 2,5-4 | D: 8 |
| P2: 5-8 | C2: 5-8 | D: 12 |
| P3: 9-12 | C3: 9-12 | D: 14 |
| P4: 13-16 | C4: 13-16 | D: 16 |

## ORDERINGCODE

| | | | |
|---|---|---|---|
| MINI-FOK | P1 | C1 | D32 |
| Machine | Pallet Set | Cable Aligning Tool&Nutrings | Duct Connection Tool |
| Mini FOK | P1 | C1 | D: 8 |
| | P2 | C2 | D: 12 |
| | P3 | C3 | D: 14 |
| | P4 | C4 | D: 16 |
| | MultipleOrdering | MultipleOrdering | MultipleOrdering |
| | P1+2+3 | C1+2+3 | D10+20+32 |

1 set of Pallet - 1 Set of Cable Aligning Tool + 1pcs Duct Connection Tool is included.

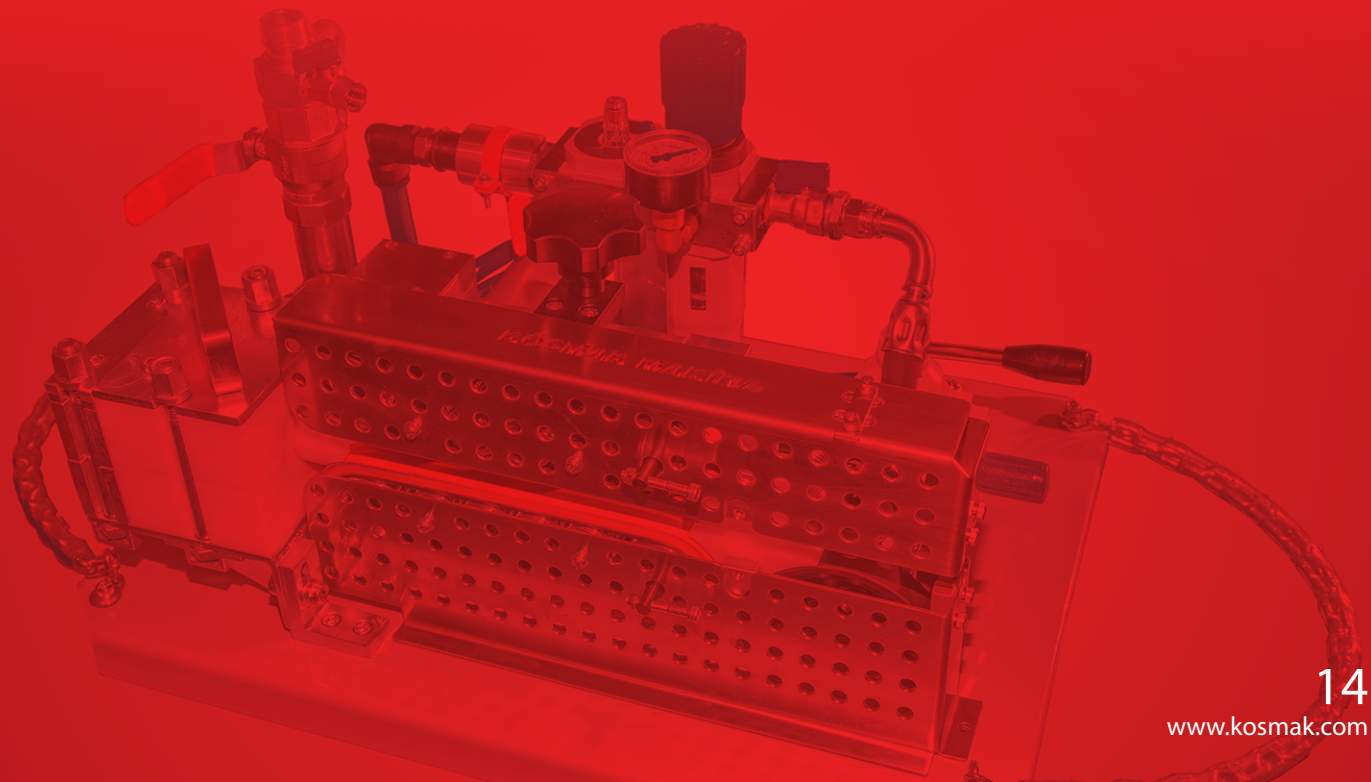

# MINIFOK -PLUS



Mini-FOK Plus Cable Blowing Machine provides an excellent flexibility and compact design to the users offering a complete solution. Allows you to blow the cables -micro type cable and micro-duct-. Mini-FOK Plus Cable Blowing Machine can install the cables in a range of Ø 2,5 to 16 mm and various ducts outer diameters 7 to 40mm are available upon request. Customized Duct diameter can be made upon request. Mini-FOK Plus is engineered for blowing telecommunication cables or micro ducts in preinstalled ducts. This multifunctional machine is easy to use for the installation of cables, micro-cables or micro-ducts by air and covers a wide range of cable diameters.

Mini-FOK Plus Machine has a significant productivity and it considerably increases your labor's production capacity. Single Operator is enough to operate the machine. A special and carefully designed pallet system assuring an excellent cable drip and decrease the damage risk. Clamping system adjust the cable outer diameter fluctuation/toleranceand extremely easy to fix the cable to machine. In addition to that, its high-tech engineered design and structure improve blowing performance. Every part of machine is engineered and produced to meet and exceed the expectation of customer requirements. Mini-FOK Plus it is equipped with a digital distance and speed indicator.

Mini-FOK Plus is a Fiber optic cable blowing machine designed to blow cables into telecommunication ducts and micro ducts by using of compressed air. Having 4 pallet options as 2,5-4mm, 5-8mm, 9-12mm and 13-16mm to blow the cables having min. 2,5mm to max. 16mm. This fiber optic cable blowing machine works with one air motor for blowing the cables and tubes. Mini-FOK Plus cleans the surface of cable before it blows the cable. This feature protects the motors and keep them clean.

Special pallet design will allow you to install your cables under muddy field conditions and Cable Blowing Power will not be decreased. You can set cable installing speed and direction with control valve. A wisely designed exit box will supply highly productive leading for pressured air into telecom ducts. Quick air connection makes your business easier with an easy plug-in method. It's completely Made in Turkey with international standards. Stylish carrying handles can easily be disappear by sliding them under the machine with its special slide system and make the operator's business easier while at the same time adding an aesthetic to the machine.

Single air motors will ensure to continuous high effective cable blowing power. You can switch on or off the air entering telecom ducts with guidance of valves.Thanks to the "Mini-FOK Plus" cable breakage prevention system, it prevents the cable from breaking in case of sudden cable blowing direction changes.Festo Lubricant system takes off moisture of pressured air which comes from compressor and supplies continuous lubricate for air motors.

# MINI-FOK PLUS

# CONTENT

## CONSISTING OF

- 1set (2pcs) of Belt
- 1pcs Digital Meter Indicator
- 1pcs Air Motor
- 1pcs Air Lubrication System
- 1set Cable Aligning Parts
- 1pcs Direction Valve Backward and Forward Directions
- Easy Cable Plug Header
- Cable Surface Cleaning Tool



## WITH

- 1pcs Operator Guide
- 1pcs Cable Inserts: Options 4mm to 8mm
- 1set Duct Inserts
- Up to 30pcs Blue Nutring (6pcs per Cable Dia)
- 2m Black Rubber O-Ring
- 1pcs Protected Wooden Case with holder
- 1pcs Quick Insert Air Jack to Compressor
- 1set Tool Kit
- 1pcs Box for plastic tools

## WITH OUT

- Air Cooler
- Lubricant Oil
- Air Compressor

# TECHNICAL DATA

## MINI-FOK PLUS

| | |
|---|---|
| Standard version | 1pcs of pneumatic motor drive |
| Type | Mini-FOK Plus |
| Pallet Options (mm) | 2,5-4 / 5-8 / 9-12 / 13-16 |
| Cable dia. [mm] | 2,5 - 16 |
| Duct OD [mm] | 7- 40 |
| Drive unit | Pneumatic |
| Max. air circulation of motor [m3/min] | 1.5 (at 6 bar) |
| Torque Nm – Max. Power | 8,5 |
| Max. distance to blow at once (Cable Dia. 6mm – Duct Dia. 16mm) (m) | 1500 |
| Linear pressure on cable [N/cm] | 0 - 101 |
| Max. speed [m/min] | 80 |
| Max. air pressure [bar] | 16 |
| Max. water pressure [bar] | 23 |
| Dimension of tools and accessories case l x w x h [mm] | 390x520x720 |
| Total weight [kg] | 52 |

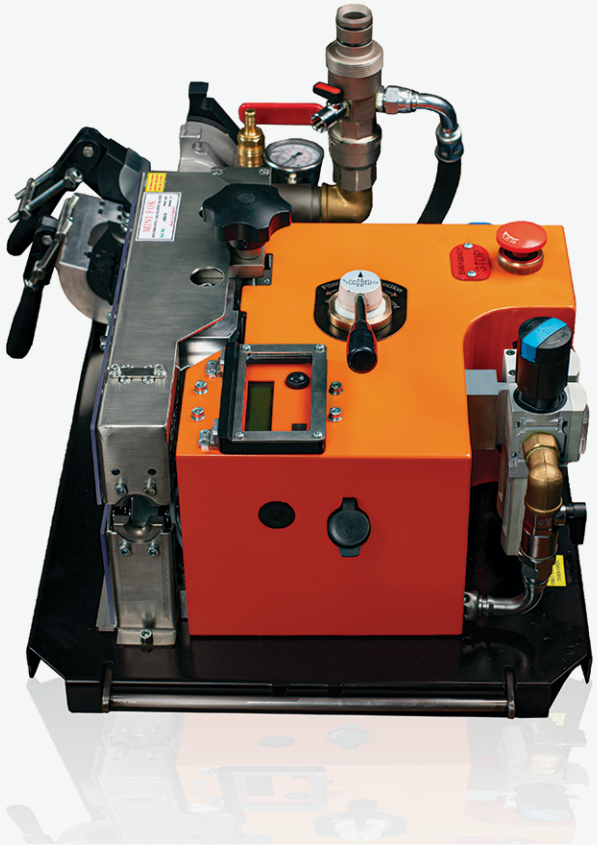



fiber cable jet

## COMPRESSOR CAPACITY RECOMMENDATION

| | |
|---|---|
| Efficiency | 1 m3/min |
| Working pressure | 12bar |

These are minimum compressor requirements up to Duct Dia. 20mm.
You may use higher capacity of compressor which can increase the effectiveness.
You can overcome the handicap of improperly installed ducts.

## PALLET, CABLE ALIGNING AND DUCT OPTIONS

| Pallet Set (mm) | Cable Aligning Tool &Nutrings (mm) | Duct Connection Tool (mm) |
|---|---|---|
| P1: 2,5-4 | C1: 2,5-4 | D: 8 |
| P2: 5-8 | C2: 5-8 | D: 12 |
| P3: 9-12 | C3: 9-12 | D: 14 |
| P4: 13-16 | C4: 13-16 | D: 16 |

## ORDERING CODE

| | | | |
|---|---|---|---|
| MINIFOK-PLUS | P1 | C1 | D32 |
| Machine | Pallet Set | Cable Aligning Tool&Nutrings | Duct Connection Tool |

MINIFOK PLUS

| | | |
|---|---|---|
| P1 | C1 | D: 8 |
| P2 | C2 | D: 12 |
| P3 | C3 | D: 14 |
| P4 | C4 | D: 16 |
| MultipleOrdering | MultipleOrdering | MultipleOrdering |
| P1+2+3 | C1+2+3 | D10+20+32 |

1 set of Pallet - 1 Set of Cable Aligning Tool + 1pcs Duct Connection Tool is included.

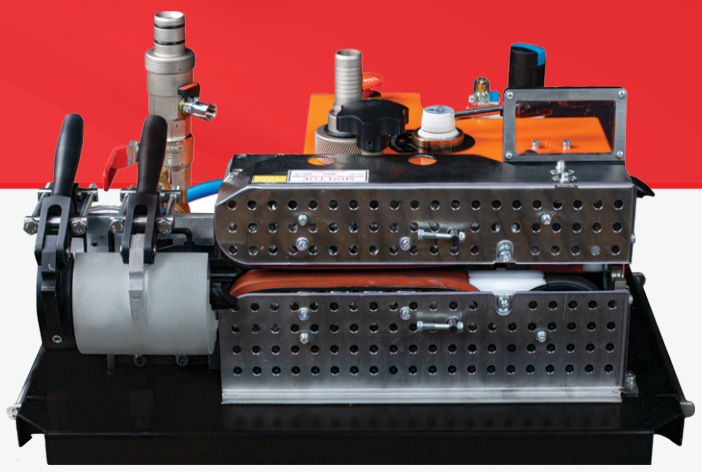

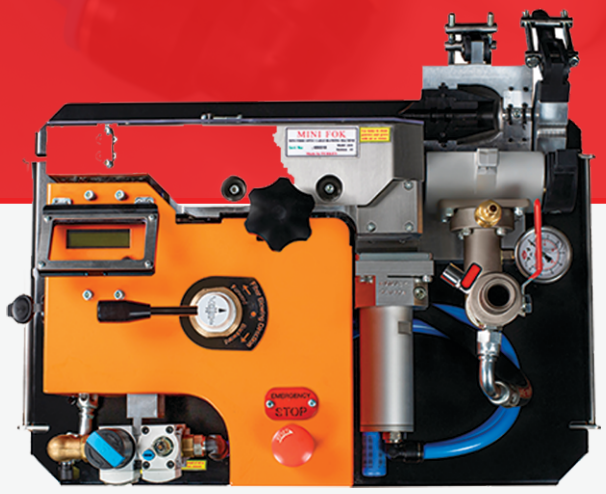

# MIKRO FOK

Mikro-FOK is designed and produced meeting the expectation of end of users. The Mikro-FOK cable blowing machine installs microcables and its versatility saves your money. The design of the Mikro-FOK provides for quick and easy component changes for different cable or duct sizes. Its compact size and portable maneuverability make the Mikro-FOK is ideally suited for either outside or in-building use. The Mikro-FOK uses compressed air to install the cable. The drive roller powered byair motors. Cable pusher rolls can change easily.One air inlet from compressor with quick connection. Quick connection part is giving with machine. Easily changeable for different cables.

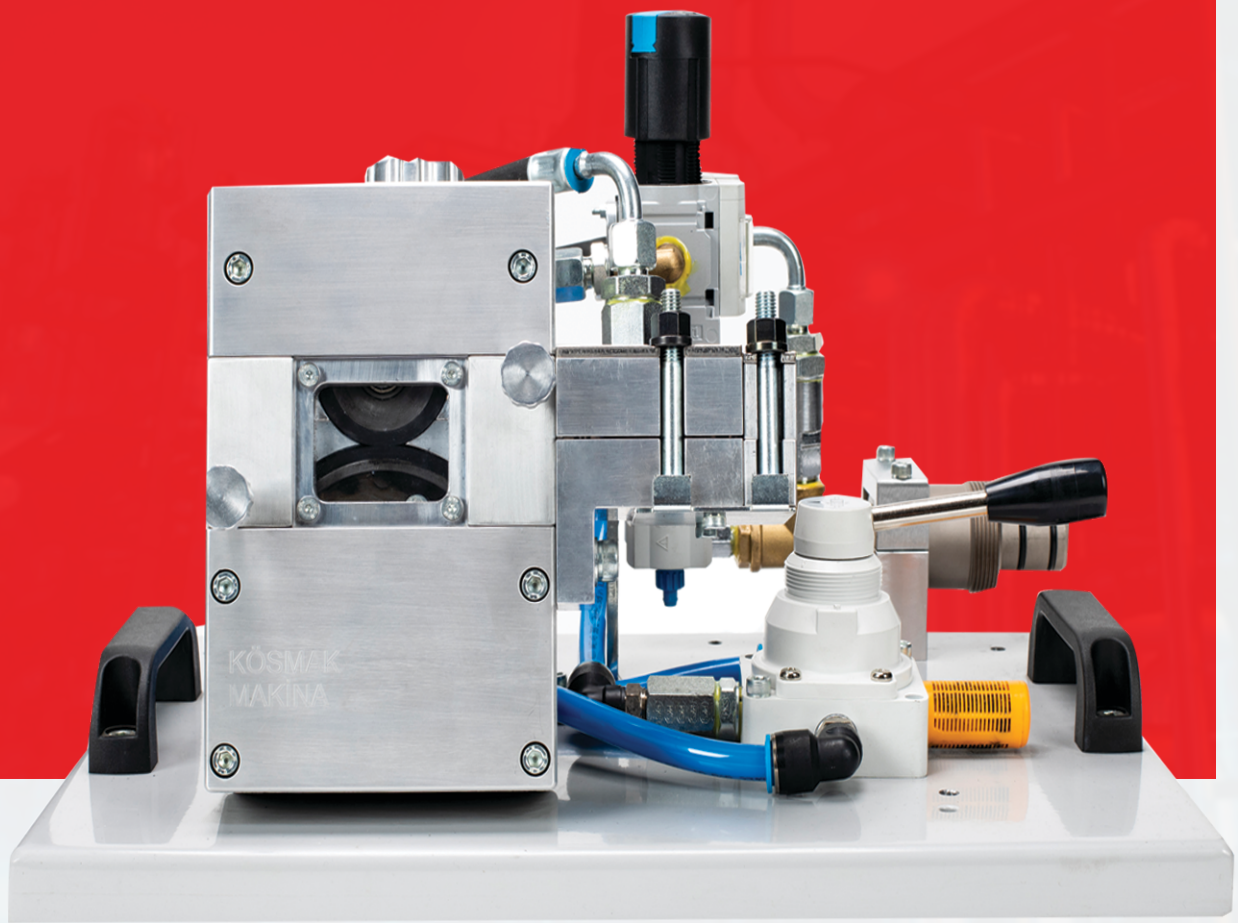


MIKRO FOK

# TECHNICAL DATA

| | |
|---|---|
| Mikro-Fok : | Micro Fiber Optic Cable Blowing Machine |
| Operatedbyone | technician |
| Cable diameter (mm) : | 3 to 6. |
| Duct diameter(mm) : | 8 to 15 |
| Dimensions of Machine (cm) : | 42x32x51 |
| Weight of Machine(kg) : | 28 |
| Cable installing velocity : | 0-80meter/minute. |
| Direction : | Forward and backward |

## COMPRESSOR CAPACITY RECOMMENDATION

| | |
|---|---|
| Efficiency | 1 m3/min |
| Working pressure | 12bars |

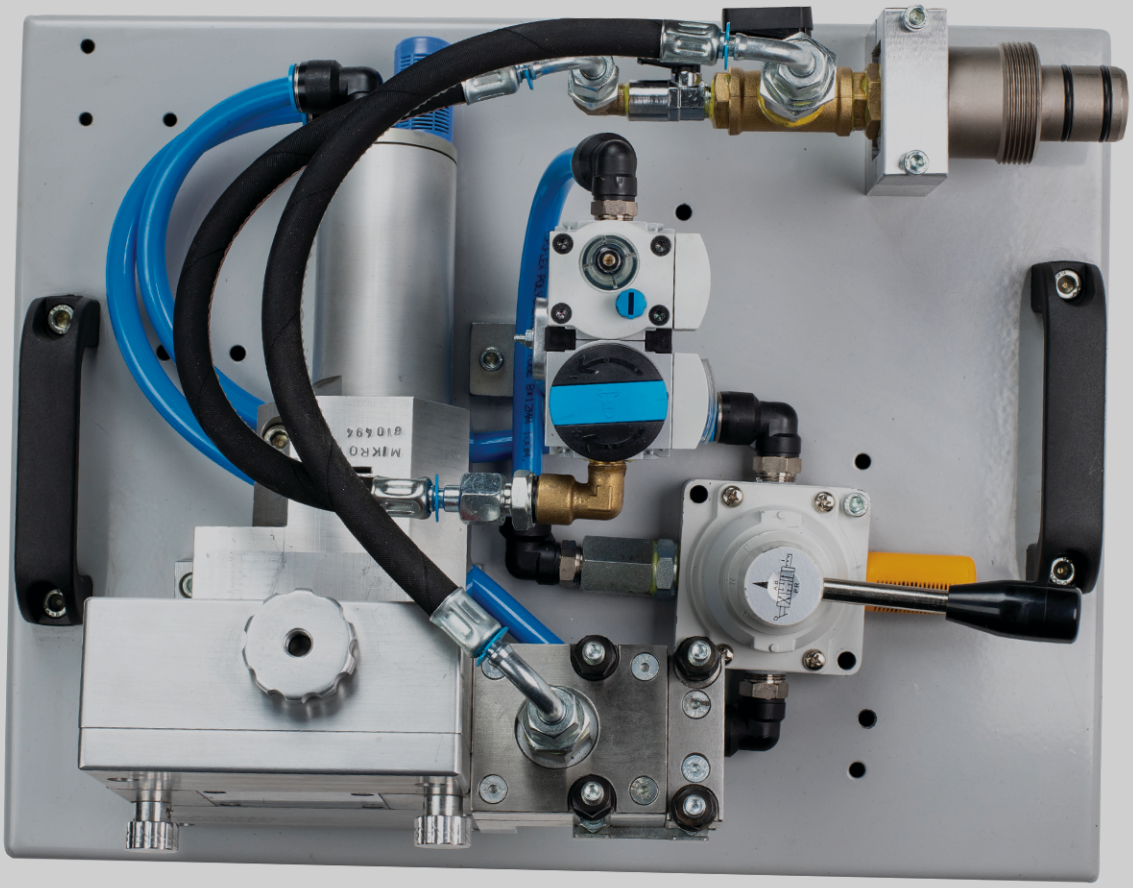

fiber cable jet

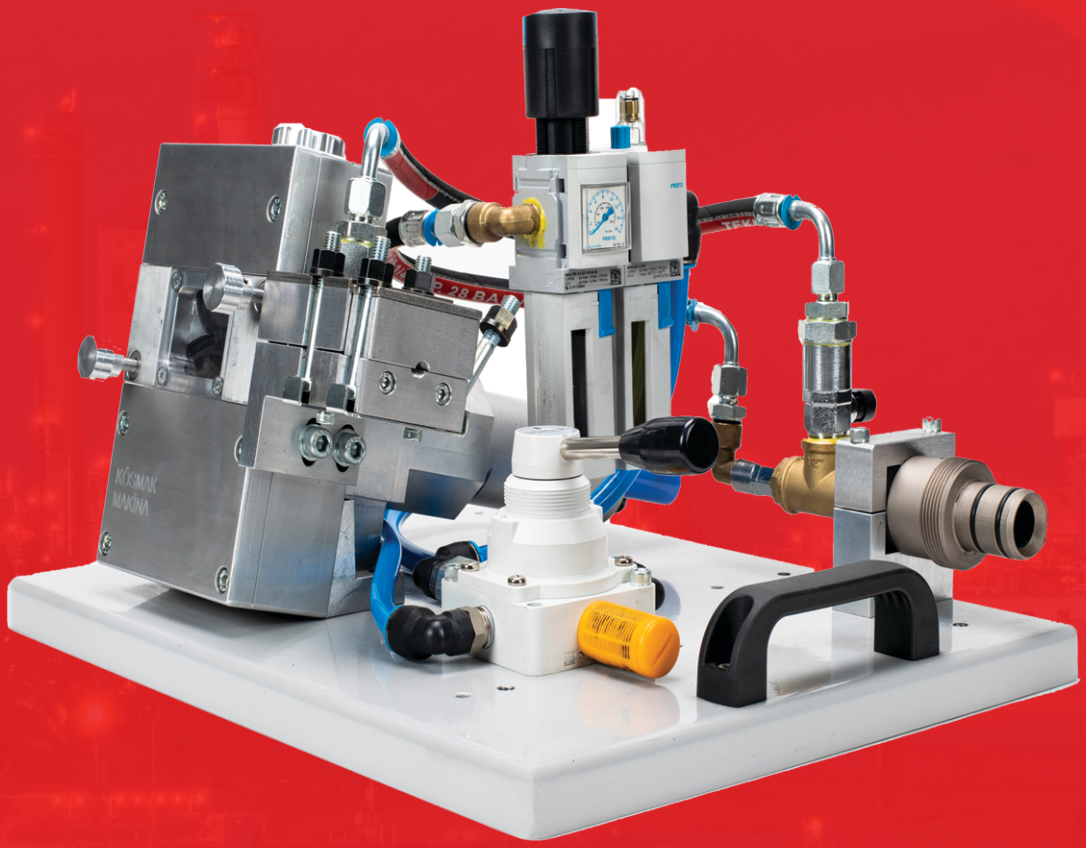


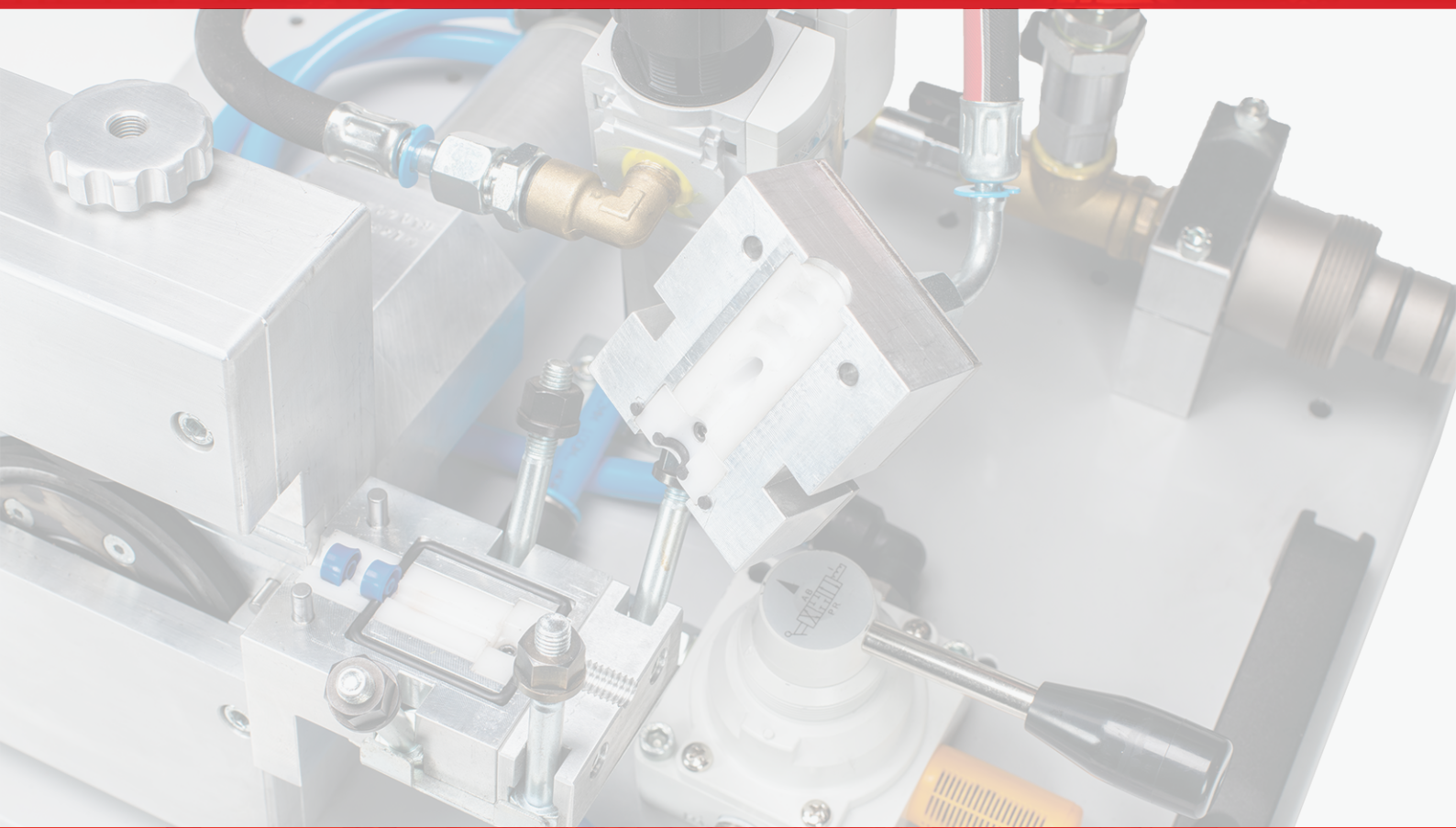

# DRILL FOK

Drill-FOK has no internal motor but only external motor such as cordless chargeable drill river. The Drill-Fok installs micro cable with a diameter range of 1, 5 to 10 mm and up to 1000 m with a speed of 110 m/min depending on your external motor. Its compact design makes your business incredibly easy. The cable blowing system structure ensures a fast and simple change of components for various cable diameter or duct diameters. Ergonomic design and mobility features make the Drill-Fok is ideal for either outside or in-building use. The Drill-Fok uses compressed air to install the cable. The drive roller, powered by most types of cordless drills-that should be ordered separately-control the microfiber as it is propelled into the micro duct. The drill-Fok machine takes the name from drilling tool because you do not need to use an internal motor with this machine you only need to use a standard drilling tool.



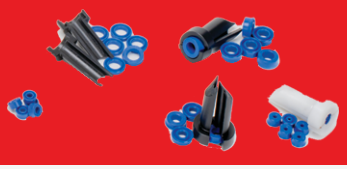

## DRILL FOK
# CONTENT

### CONSISTING OF

- 1set (2pcs) of RubberCoatedRoll
- 1pcs MechanicalMeterIndicator
- 1pcs HeadThreaded Drive Shaft

### WITHOUT

- ChargeableDrillingTool
- LubricantOil
- AirCompressor

### WITH

- 1pcs Operator Guide
- 1pcs –Cable Inserts: Options1,5mm to10mm
- 1setDuctInserts
- 30pcs Blue Nutring (6pcs per Cable Dia)
- 2m Black Rubber O-Ring
- 1pcs ProtectedWooden Case withholder
- 1pcs QuickInsertAirJack

# TECHNICAL DATA

## DRILL-FOK

| | |
|---|---|
| • Operatingwithexternal | drillingtool |
| • Micro DuctDiameter (mm): | 3-18 |
| • Cable diameter (mm): | 1-5mm |
| • Max. Operating Pressure: | 15bar |
| • MeterIndicator: | Mechnical |
| • BlowingDirection: | Forward and backward |
| • Quickconnection | pipe from compressor |
| • Max. BlowingDistance: | 1000m |
| • BlowingSpeed: | 90m/mindepends on external motorsspeedcapacity |
| • WeightwithoutPackage: | 6 |
| • GrossWeigtwithPackage: | 10kg |
| • Dimensionswithpackage(cm): | 27x32x28 |

## Compressor Capacity Recommendation

| | |
|---|---|
| Ductsupto | 8mm – 0,8 m3/min |
| Ductsupto | 8/12mm – 1,0 m3/min |
| Ductsupto | 12-15mm – 1.5 m3/min |

Theseareminimum compressorrequirements. Youmayusehighercapacity of compressorwhich can increasetheeffectiveness. You can overcomethehandicap of inproperlyinstalledducts.

## Drive Roller, Cable AligningandDuctOptions

| Drive Roller (mm) | Cable AligningTool &Nutrings (mm) | Duct Connection Tool (mm) |
|---|---|---|
| D1: 1.5-2.5 | C1: 1.5-2.5 | D: 3 |
| D2: 2.5-4 | C2: 2.5-4 | D: 4 |
| D3: 4-6 | C3: 4-6 | D: 5 |
| D4: 6-8 | C4: 6-8 | D: 9 |
| D5: 8-10 | C5: 8-10 | D:13 |

## ORDERING CODE

| Drill-FOK | D1+2 | C1+2 | D3+5+13 | Multiple Ordering |
|---|---|---|---|---|
| Machine | Drive Roller | Cable Aligning Tool &Nutrings | Duct Connection Tool | Multiple Ordering |
| Drill-FOK | D1: 1.5-2.5 | C1: 1.5-2.5 | D: 3 | D8+12+15 |

fiber cable jet

# Y-Block Connector

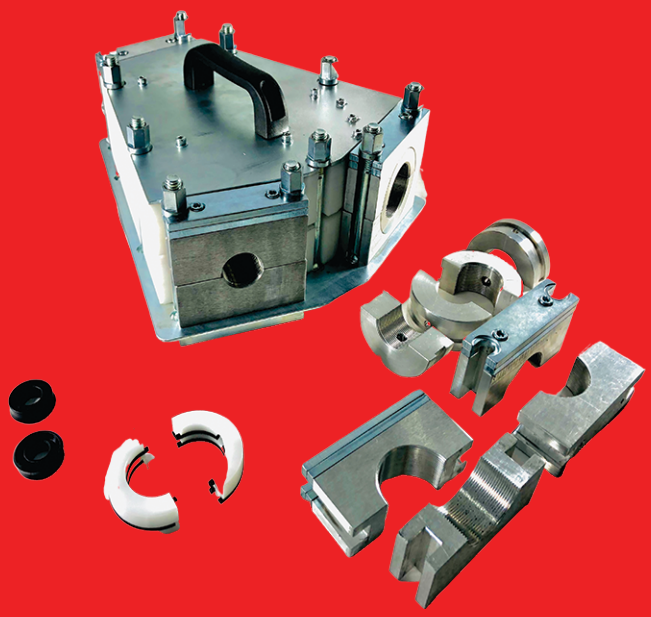

Y-connectoror Y Block Overflowis acableblowingaccessoryforoverblowingexistingcable in a ductwith a cableblowingmachine. In case of there is a cable already blown into duct you can blow another one or you can blow thethird cable.

WithoutY Connector overblowdevice you cannot increase cables as you cannot prevent air leaks. You can use this tool for different ducts and cables by cable seals and nutrings that we will be supplied with the product as per your requirements. Required ducts and cable diameters should be stated separately.

The Single Size Junction Box consist of an aluminum base and cover that structure a pressurized air chamber into which one finish of a current involved inner duct can be appended. The current cable can leave the case through an exit hole that has 3 cable seal spaces, one of which will house the seal to suit the size of the current cable. The third branch is then associated with a Cable Blowing Machine through a short slave length of inner duct for the deployment of the additional cable or tube(s). Required seals should be provided as the Y Connector doesn't include any accessories in shipping configuration

Y Connector Jetting Tools / Y blockoverblow devices are engineered to optimize the space in an existing occupied duct and enable you thedeployment of a 2ndcable, or multiple micro-ducts while blowing the Fiber Optic cables.For cables Ø 4 to 22 mm and ducts OD 20 to 63 mm.The blowing performance achieved with this device corresponds to around 50% of the one achieved with the first cable. This means that you will blow the second cable slower than the first one. One branch of the Y-Block Connectorconnected with the machine is utilized for feeding the second cable in the duct.Deployment distance accomplished with two extra cable is almost equivalent to the one got with one cable.

## Features

1). Compact and light 2). Allows admittance to extremely small dia. chambers
3). Easy transportation 4). Easy maintenance
5). Easy control (allows you to use it in the two directions

## TECHNICAL DATA

| | |
|---|---|
| Standard version | Y-Connector |
| Type | Standard |
| Cable dia. [mm] | 6-18 |
| Duct OD [mm] | 20-63 |
| Max. Air pressure [bar] | 12 |
| Packed in Wooden Case: | Fumigated Plywood |
| Package Dimensions l x w x h [mm]: | 370x 350 x 180 |
| Total Net weight [kg] | 14 |
| Total Gross Weight [kg]: | 17 |

# HOW TO USE Y-BLOCK CONNECTOR

## 3 Cable Application

2 of Cables Are Fixed And 3rd cables is blown by the help of Y-Connector

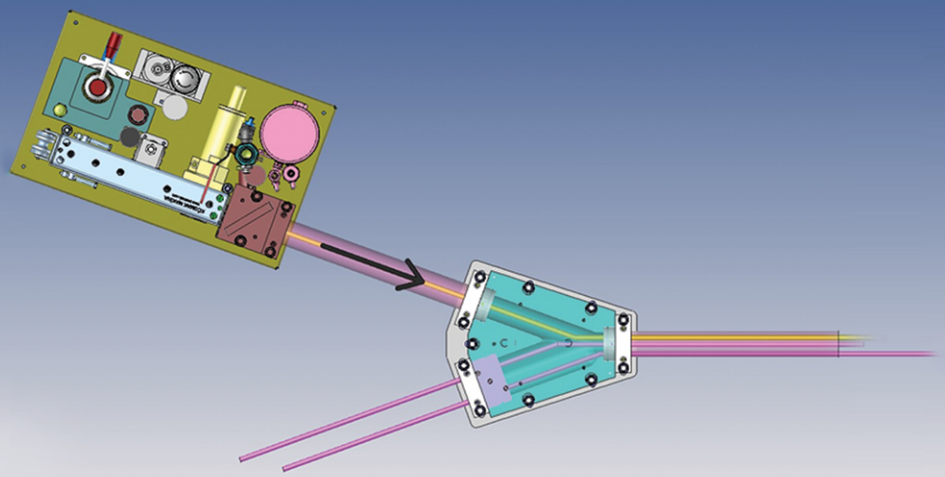

## 2 Cable Application

2 of Cables Are Fixed And 3rd cables is blown by the help of Y-Connector

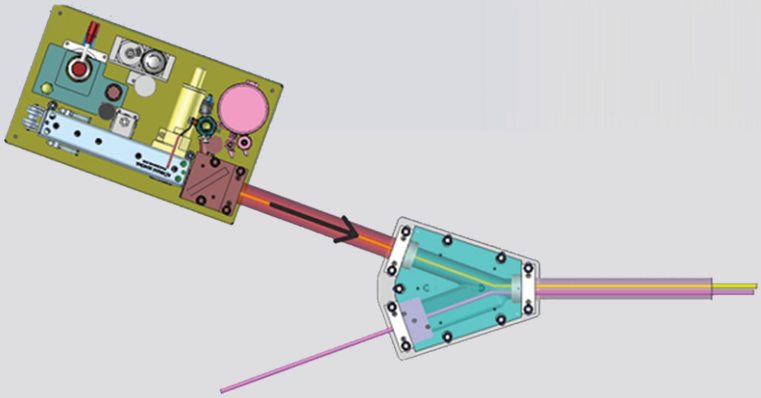

## 2 Cable 2 Machine Application

2 Cables Simultaneously Are Blown By 2 cables Blowing Machine.

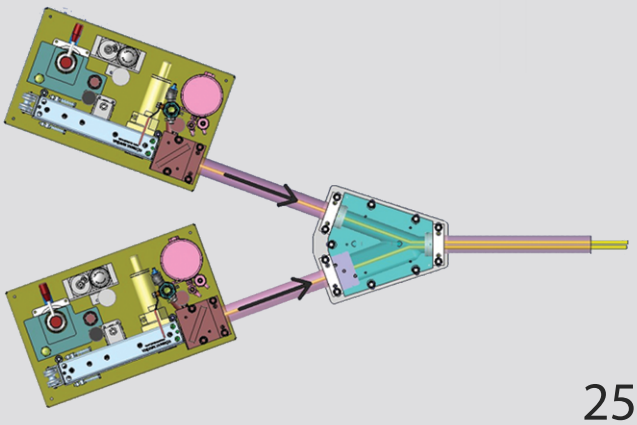

H1

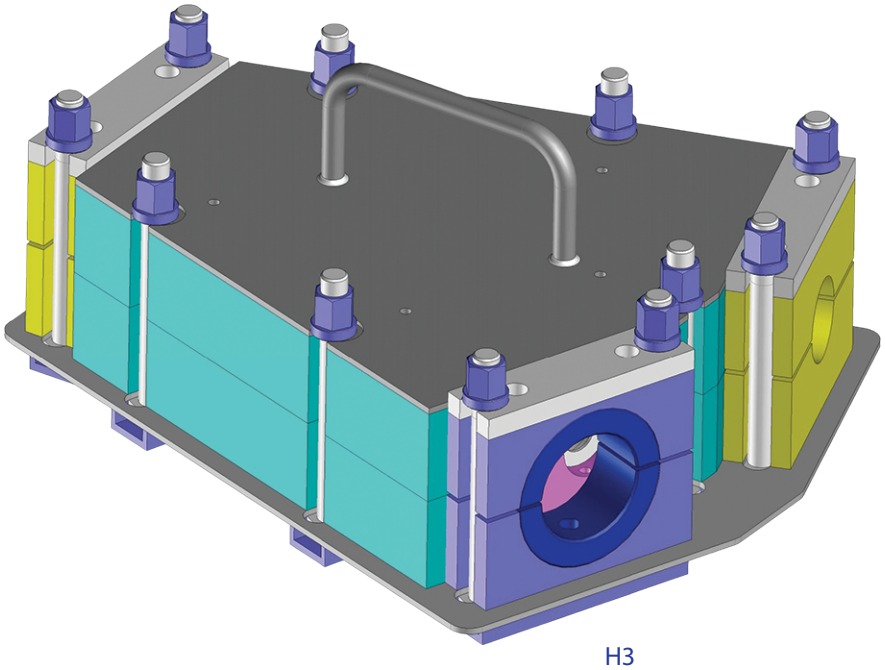

H2

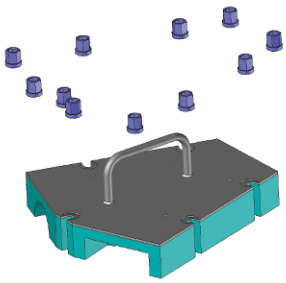

H3

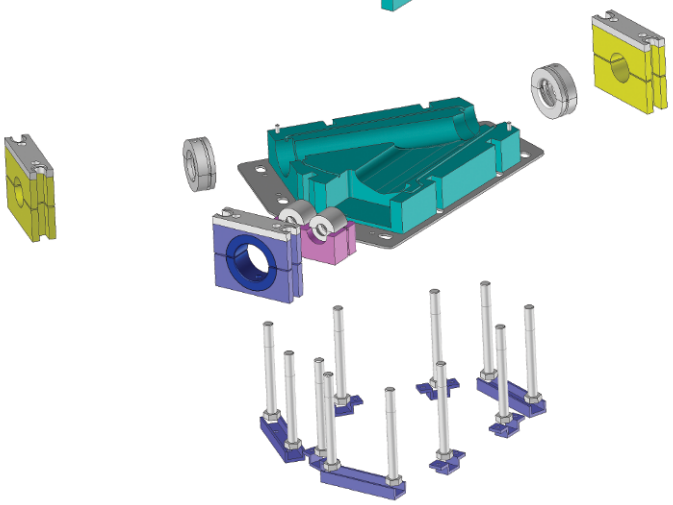

| Y-connector | H1 H2 H3 | C1 =4-8 , C2= 9-13 , C3 = 14-18 , C4 = 19-25 |
|---|---|---|
| Connector | HDPE Duct Parts | Cable Aligning Tool&Nutrings |
| Y-Connector | H1 | C1 |
| | Multiple Ordering | |
| | H1+3+4 | |

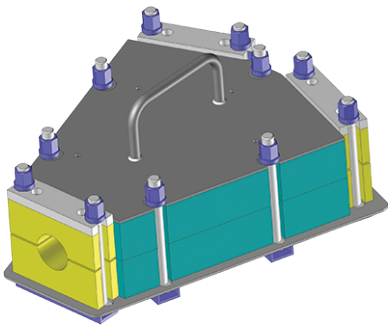

# AIR COOLER

Air Cooler remarkably effects and increases the "blowing" performances and protects the cable from the high temperature with the cooling feature of this accessory when climate temperature exceeds 20°C.

Therefore, Air Cooler Machine is very much recommended making a safe cable deployment in long distances without or with less friction and this will protect your cable from the potential damages that are mainly high temperature on the cable jacket surface. This heat may cause to melding of cable jacket and cost you high.

Moreover, special mechanism of machine changes the high temperature air with the air outside. The pressurized cool air will drive the fan that propels the air outside with low temperature.

Therefore, Air Cooler Machine is very much recommended making a safe cable deployment in long distances without or with less friction and this will protect your cable from the potential damages that are mainly high temperature on the cable jacket surface. This heat may cause to melding of cable jacket and cost you high.
Moreover, special mechanism of machine changes the high temperature air with the air outside. The pressurized cool air will drive the fan that propels the air outside with low temperature.

This machine should be placed between the air-compressor and the cable blowing machine, which limits the pressurized air's temperature up to max around 10°C more than the air in the climate in order to prevent the overheatingproblems.

Without air cooler, the temperature of compressed air exiting the compressor is around 35°C above the ambient temperature.

In case no air cooler, then the air temperature compressed may exceed the environment temperature by 30 or 35C.. This means that total temperature may go up to 70C. Such a temperature will meld the outer jacket of cable.

Any temperature more than 50°C, will soften the outer sheath of cable and also pre-installed duct walls. Due to aforesaid reasons your cable deployment time and cost will remarkably increase, length of cable you install will be much less. This will bring the risk of bursting of ducts.

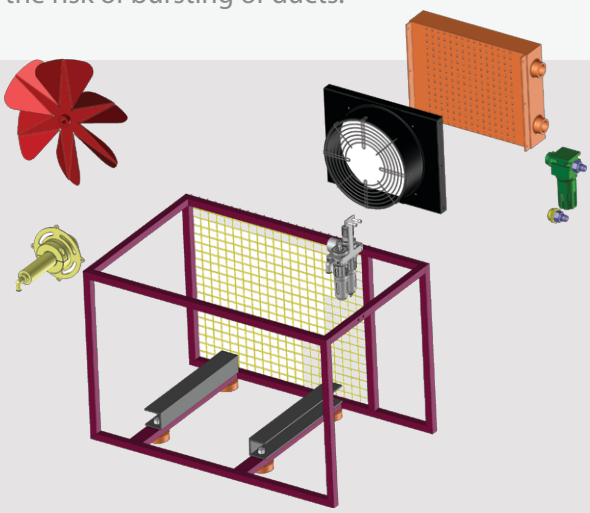

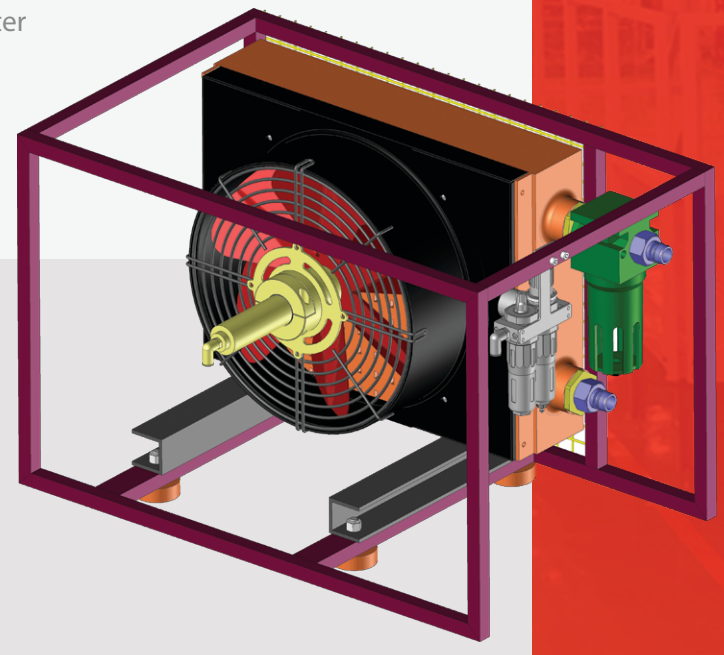



# AIR COOLER

## FEATURES

- Easy to move
- Instant Fast set-up
- Simple to use
- Maintenance free, no special equipment needed.
- No dependence to any power source.
- Well secured against possible mechanical strikes

## TECHNICAL PARAMETER

| | |
|---|---|
| Standard version | Air cooler |
| Max. air requirement of engine [m3/min] | 0.85 (at 7 bar) |
| Max. operating pressure (bar) | 12 |
| Max. air flow [m3/min] | 12 |
| Max. air inlet temperature [°C] | 100 |
| Max. air pressure at the motor [bar] | 7 |
| Max. pressure drop [bar] | 0.2 |
| Package Dimensions l x w x h [mm]: | 820x540x600 |
| Total Net weight [kg] | 40 |
| Total Gross Weight [kg]: | 56 |

# SOME SPECIFICATIONS OF AIR COOLER

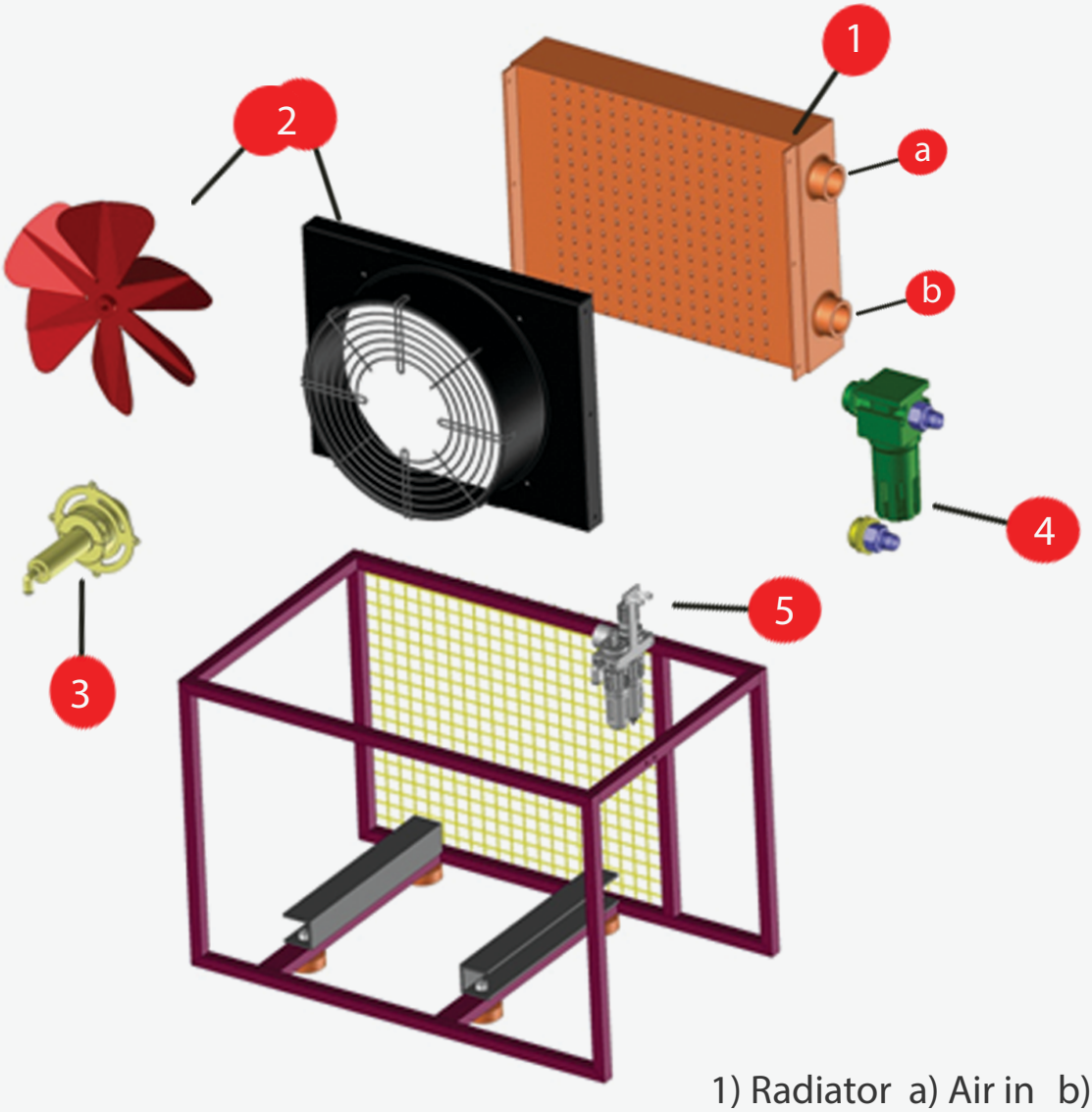


1) Radiator  a) Air in  b) Air out
2) Propeller and propeller body
3) Air Motor
4) Filter
5) Air regulator

# HOW TO USE
# AIR COOLER

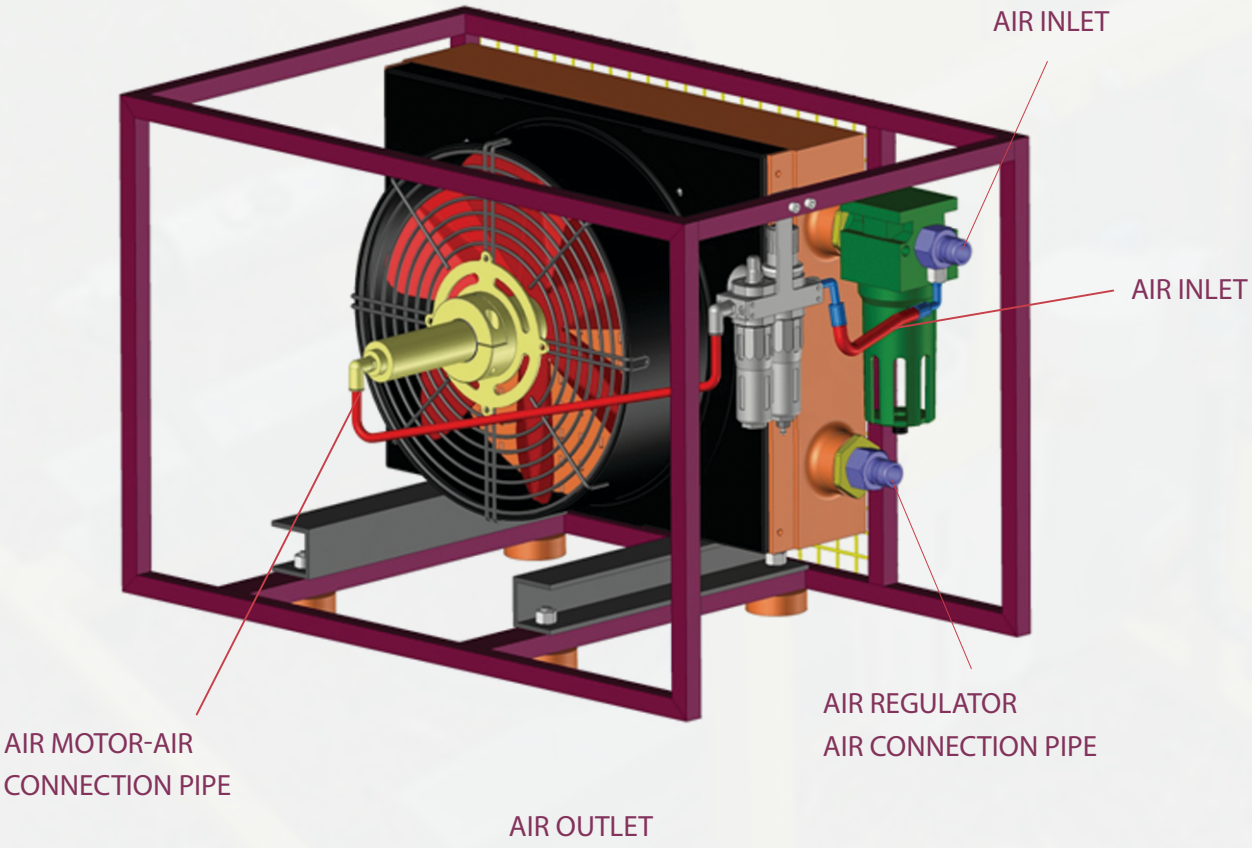


First, the air from the compressor is directed through the filter through the air inlet to the radiator.
The air that cooling in radiator exits from air outlet and it is ready for using at the machine.
There are two air pipes for running to air motor. The first pipe transfers the air to air regulator.
The air that lubricating in regulator transfers to air motor through the second pipe.

# Aluminum Split Duct Coupler

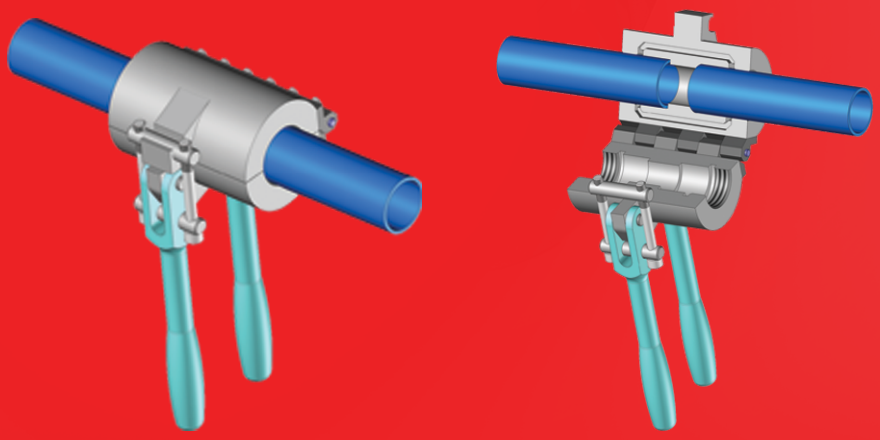

Aluminum Split Duct Coupler is hinged and for temporarily coupling all types of innerduct during the cable blowing process. The wing nut makes it very easy to quickly assemble and to disassemble the leading section of innerduct before and after blowing fiber.They are used for installation Fiber Optic Cable with cable blowing machine to connect the underground install duct to couple with loaded ducts. Our coupler is made of high-grade aluminum raw material that can stand against environmental difficulties such as fungus attacks and corrosion. Very easy to use at trench depths or manholes. You don't need any spanners.

Standard Size available are at 20, 32, 40, 50mm, and can be customized upon request.

# Features

Small and light
Allows access to very narrow chambers
Easy transportation
Easy maintenance
Easy manipulation (possibility to use it in both directions)
No nut, no losing them in trenches

# Why to use a Split Innerduct Couplers

There are two advantages of Duct Coupler. One of them is that you spend much less time in coupling the ducts compared to plastic tools. The other advantage of Duct Coupler is that you can re-use these devices with no limitation. However standard plastic pipe coupler devices take too much time and you cannot remove it from the cable without cutting or breaking them that is highly cost in long term. Our steel Duct Coupler is designed cope all these difficulties. You will work much more efficient with these tools and less costly.

# HOW TO USE A DUCT COUPLING DEVICE?

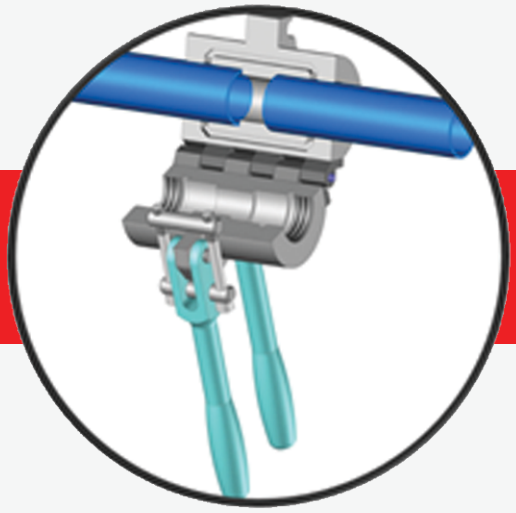



## How to use it?

Super easy to it , Open the coupler,place the cable from both sides. Tighten the couplers and start installing

## Duct Connector

Duct Diameter O20-O32-O40-O50
Duct be produced with various diameter as per customer requirments

## OrderingCode

| Duct Coupling Device | D20 |
|---|---|
| Device | Duct Diameter |
| Duct Coupling Device | D20 |
| | D32 |
| | D40 |
| | D50 |

# TRAILER MOUNTED CABLE FLEETER

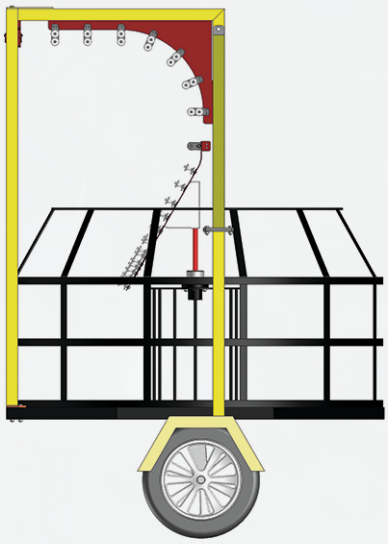

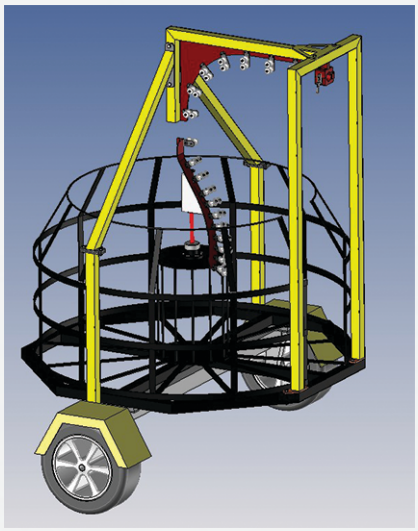

The Trailer Mounted Cable Fleeter replaces the manual handling for "figure eighting" cable and gives extra protection and security to the cable. Following deployment of the cable in the first leg of duct route the balance of the cable is taken out from the drum and took care of into the Fleeter, thereby delivering the cable end ready for blowing into the second leg.

The Fleeting machineenables a smooth and simple system while assuring the cable safety from pedestrians or vehicles and prevents contamination from mud, soil or dust.

The Fleeter is built to operate with the cable blower, which delivers cable supply within and outside of the Fleeter.The unit hosts (3,000 meters) of (13mm) cable, allowing drum lengths of (6,000 meters) to be utilized.The Fleeting machineis made of a road going trailer chassis on which is mounted a cable storage cassette, rotating cable guide quadrant and duct clamp assembly.

## TECHNICAL DATA

| | |
|---|---|
| Drum Diameter Max: | 1600 mm |
| Drum Diameter Min: | 800mm |
| Tyres: | 145 R10 |
| Length: | 3420mm |
| Width: | 2300 mm |
| Height: | 2330 mm |
| Weight: | 325kg |
| Weight with box: | 420 kg |

# AIR COOLER FEATURES

- Brakes: Interia type brakes with autoreverse
- Towing Hitch: Eye – 30mm, 40mm, 50mm
- Ball Type – 50mm

## DIMENSIONS

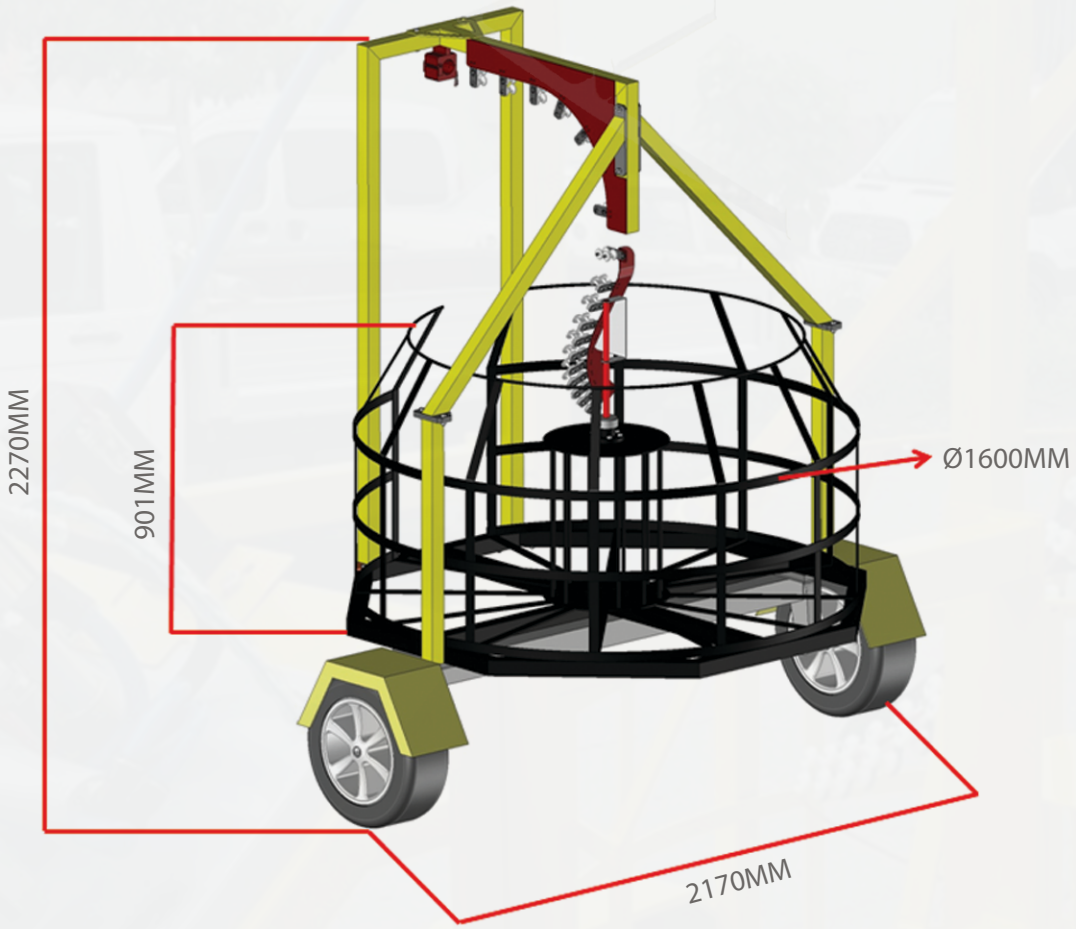


## ORDERINGCODE

| Cable Fleeter | | | |
|---|---|---|---|
| Machine | Pallet Set | Cable AligningTool &Nutrings | Duct Connection Tool |
| Cable Fleeter | N/A | N/A | N/A |

All accessories and toolsare included.

# HOW TO USE CABLE FLEETER

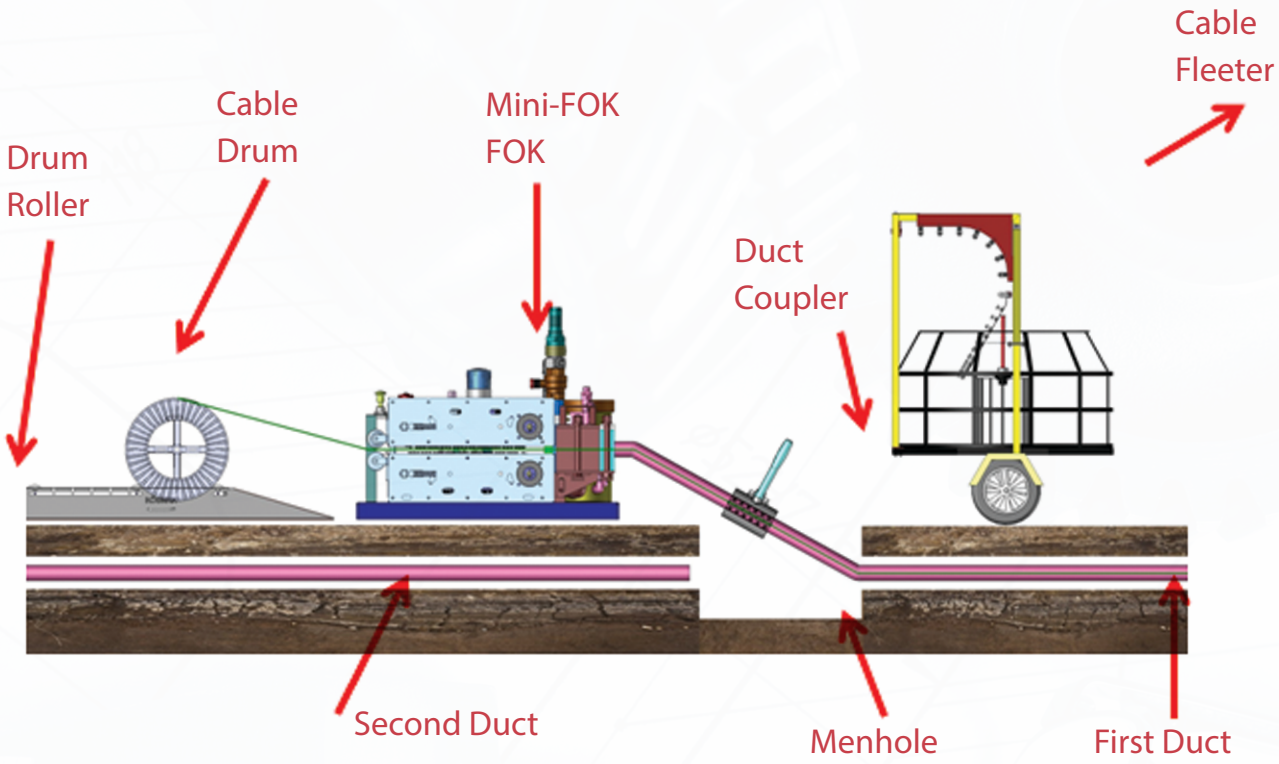


We have;
Cable Drum having 2km of fiber cable,FOK Machine or Mini-FOK Machine, Duct Coupler,Cable Fleeter.

1st first step, We install 1km Fiber cable into first duct

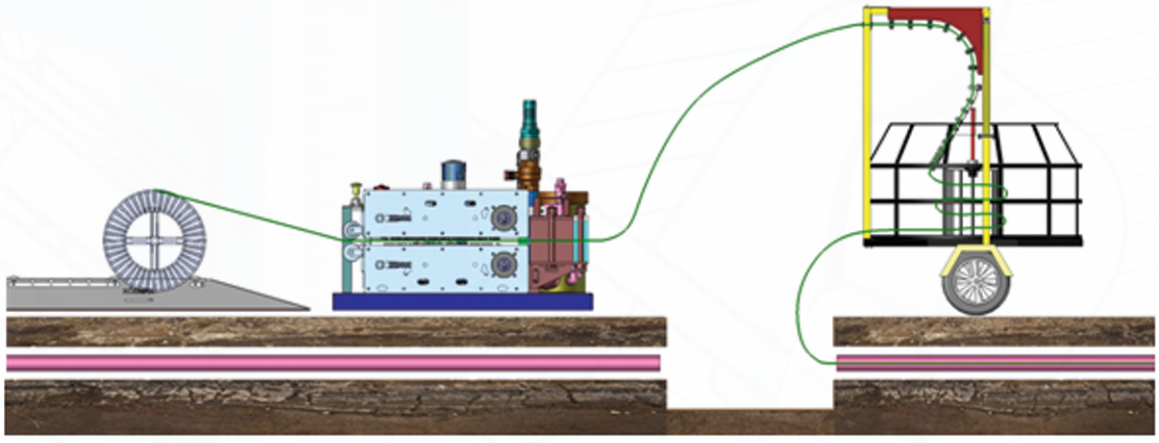

2nd step, We un-drum remaining Fiber Optic cable into Cable Fleeter.

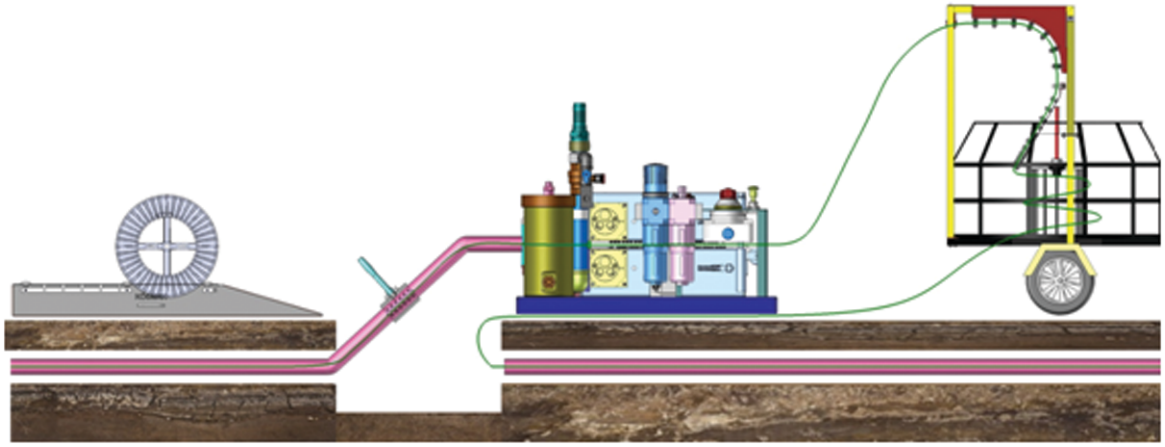

At 3rd step, We install the fiber optic cable - that we have un-drumed into Cable fleeter on the step step- into second duct.



Finally, 2km of fiber cable is deployed into both of the ducts.

# CABLE DRUM ROLLER

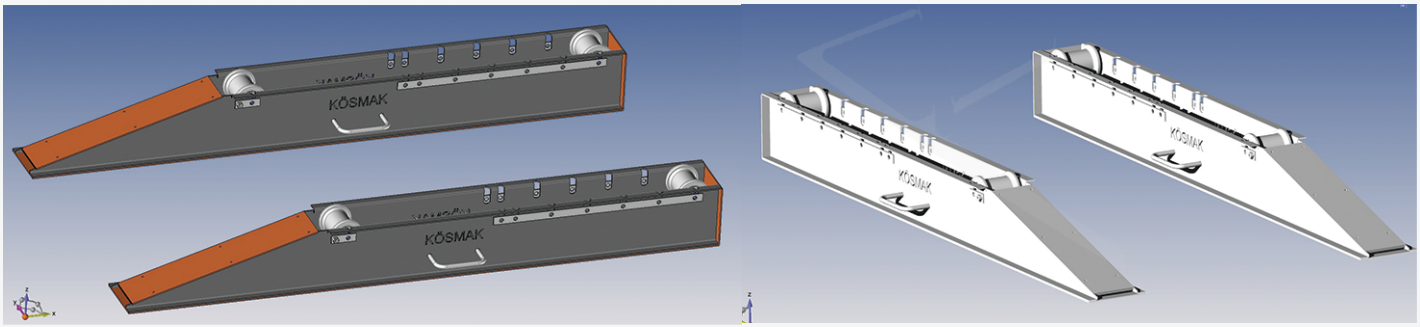


Cable Drum Roller is the tool for Rolling cable on it. You can use cable drum roller for different drum diameters and different widths. You shall change the place of rear roller to use machine for different cable drums. You can use cable drum roller for drums from 400 mm dia to 1500 mm diameter. It is handy structure allow you to to carry on your hand. This robust heavy duty adjustable cable drum roller set (also known as a wire drum roller) is ideal for despoilingand recoiling various cables during installations. Cable Drum Roller is manufactured from heavy duty fabricated painted mild steel and uses heavy duty rollers (which are also adjustable) to ensure any size drum should fit. Ramp entry and exit eases the loading and unloading of drums onto the rollers themselves

## ORDERINGCODE

| Machine | Pallet Set | Cable Aligning Tool &Nutrings | Duct Connection Tool |
|---|---|---|---|
| Cable Drum Roller | N/A | N/A | N/A |

All accessories and tools are included.

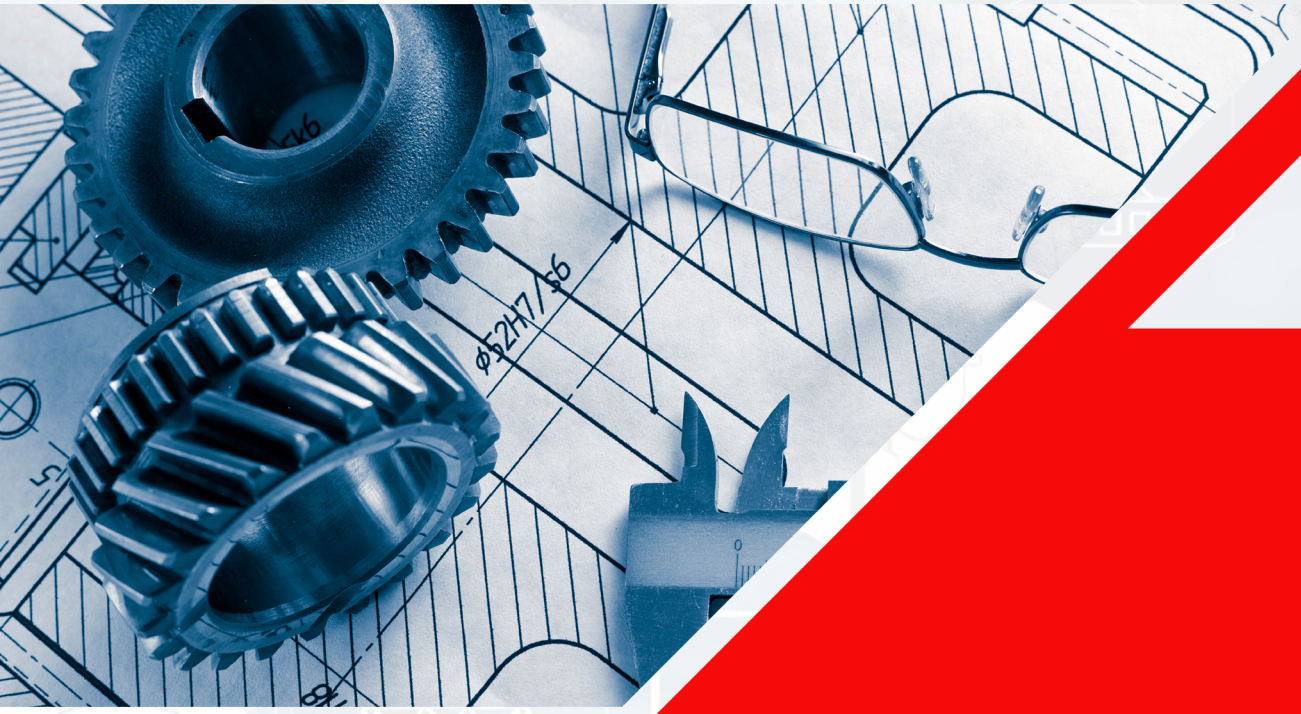

For more information contact

Körfez Sanayi Sitesi 1.st Street
201 Blok No:4 & 6 İZMİT
Kocaeli/ TÜRKİYE

+90 262 3352400

info@kosmak.com

www.kosmak.com

fiber cable jet