CONTACTS FOR MAINTANANCE AND MANUFACTURING

Adress : Karadenizliler Mah. Işıklı Sok. No:3
Başiskele / KOCAELİ

Telephone : +0090 262 335 24 00

Fax : +0090 262 335 24 15

Mail : info@kosmak.com

Website : www.kosmak.com

Fiber Optic Cable Blowing Machines'

ACCESSORIES

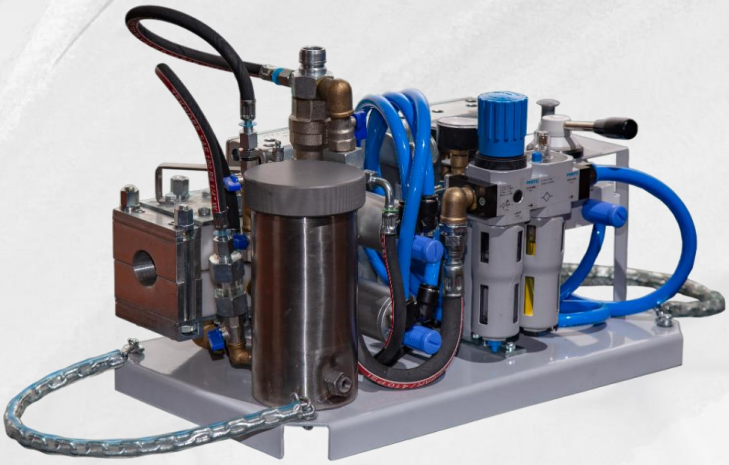

KÖSMAK MACHINE HISTORY

Our company has been in the machinery and machinery spare parts manufacturing sector since 1994. Since 1999, almost all of the fiber cable blowing works in Turkey have been done using fiber optic cable blowing machines produced by KÖSMAK MAKİNA.

It continues its R&D activities on fiber blowing machines and revisions are made according to customer requests.

Fiber optic cable blowing machines produced by Kösmak Makina are used in many countries of the world, especially in Italy, the Netherlands, Uruguay, Holland, Germany, England, African Countries, Canada, USA, Syria, Iraq, Romain, Bulgaria, Kazakhistan, Libya and Suudi Arabia.

OUR UNDERSTANDING OF QUALITY;

Based on the principle of customer satisfaction first, our focus is to fully perceive customer demands and expectations and provide complete products and services accordingly,

To achieve this goal;

-Continuously improving product quality, reducing costs while increasing product qualities,

-To fully meet technological infrastructure and personnel information needs,

-Aiming for continuous improvement as a whole with the participation of employees.

OUR MISSION

To be the first choice of our customers with our products, solutions, after-sales services, reliability and high business ethics.

OUR VISION

To be a leader in its country and a preferred company in the world with its organization that that makes makes a name for itself in the technological developments in the sector in which it produces products and services, adds value to the lives of its customers and the society in which it operates, is admired for its performance in the solution partnerships it establishes with its customers, and adopts sustainable development as its working culture.

CONTENTS

AIR COOLER..... 1-2

CABLE FLEETER..... 3-5

DUCT COUPLER..... 6

CABLE DRUM ROLLER ON BEARINGS..... 7

CABLE DRUM ROLLER ON PIPE..... 8

Y-CONNECTOR..... 9-11

AIR COOLER

CABLE FLEETER

DUCT COUPLER

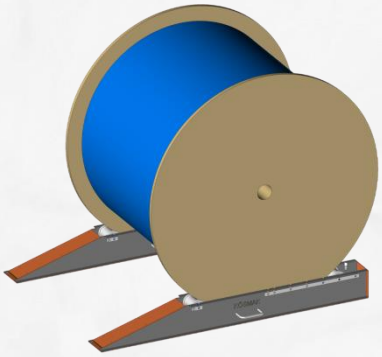

CABLE DRUM ROLLER ON BEARINGS

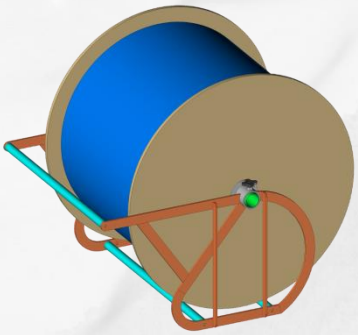

CABLE DRUM ROLLER ON PIPE

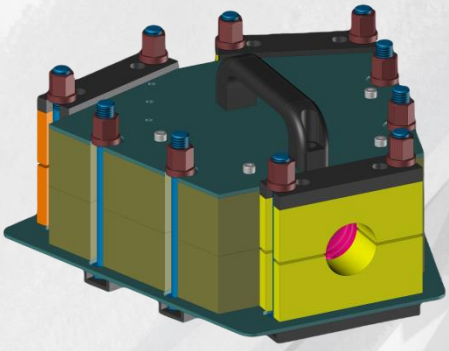

Y- CONNECTOR

AIR COOLER

Air Cooler remarkably effects and increases the "blowing" performances and protects the cable from the high temperature with the cooling feature of this accessory when climate temperature exceeds 20°C.

Therefore, Air Cooler Machine is very much recommended making a safe cable deployment in long distances without or with less friction and this will protect your cable from the potential damages that are mainly high temperature on the cable jacket surface. This heat may cause to melding of cable jacket and cost you high. Moreover, special mechanism of machine changes the high temperature air with the air outside. The pressurized cool air will drive the fan that propels the air outside with low temperature.

Therefore, Air Cooler Machine is very much recommended making a safe cable deployment in long distances without or with less friction and this will protect your cable from the potential damages that are mainly high temperature on the cable jacket surface. This heat may cause to melding of cable jacket and cost you high. Moreover, special mechanism of machine changes the high temperature air with the air outside. The pressurized cool air will drive the fan that propels the air outside with low temperature.

This machine should be placed between the air-compressor and the cable blowing machine, which limits the pressurized air's temperature up to max around 10°C more than the air in the climate in order to prevent the overheatingproblems.

Without air cooler, the temperature of compressed air exiting the compressor is around 35°C above the ambient temperature.

In case no air cooler, then the air temperature compressed may exceed the environment temperature by 30 or 35C.. This means that total temperature may go up to 70C. Such a temperature will meld the outer jacket of cable.

Any temperature more than 50°C, will soften the outer sheath of cable and also pre-installed duct walls. Due to aforesaid reasons your cable deployment time and cost will remarkably increase, length of cable you install will be much less. This will bring the risk of bursting of ducts.

Features

- Easy to move
- Instant Fast set-up
- Simple to use
- Maintenance free, no special equipment needed.
- No dependence to any power source.
- Well secured against possible mechanical strikes

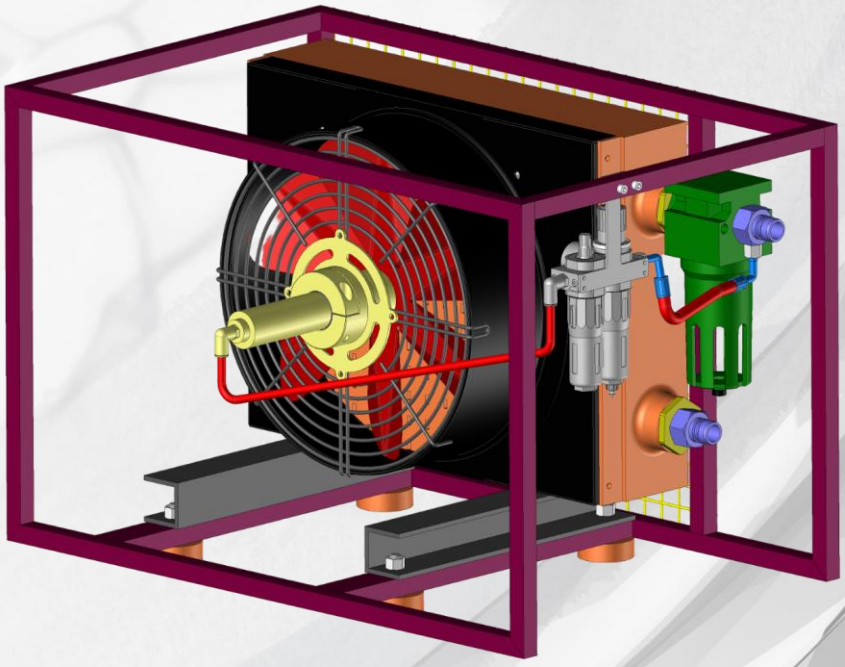

TECHNICAL DATA

Standard Version	Air Cooler
Max. Air Requirement of Engine (m^3/min)	0,85 (at 7 bar)
Max. Operating Pressure (bar)	12
Max. Air Flow (m^3/min)	12
Max. Air Inlet Temperature (°C)	100
Max. Air Pressure at The Motor (bar)	7
Max. Pressure Drop (bar)	0,2
Package Dimensions l x w x h (mm)	820 x 540 x 600
Total Net Weight (kg)	40
Total Gross Weight (kg)	56

THE UNITS OF AIR COOLER

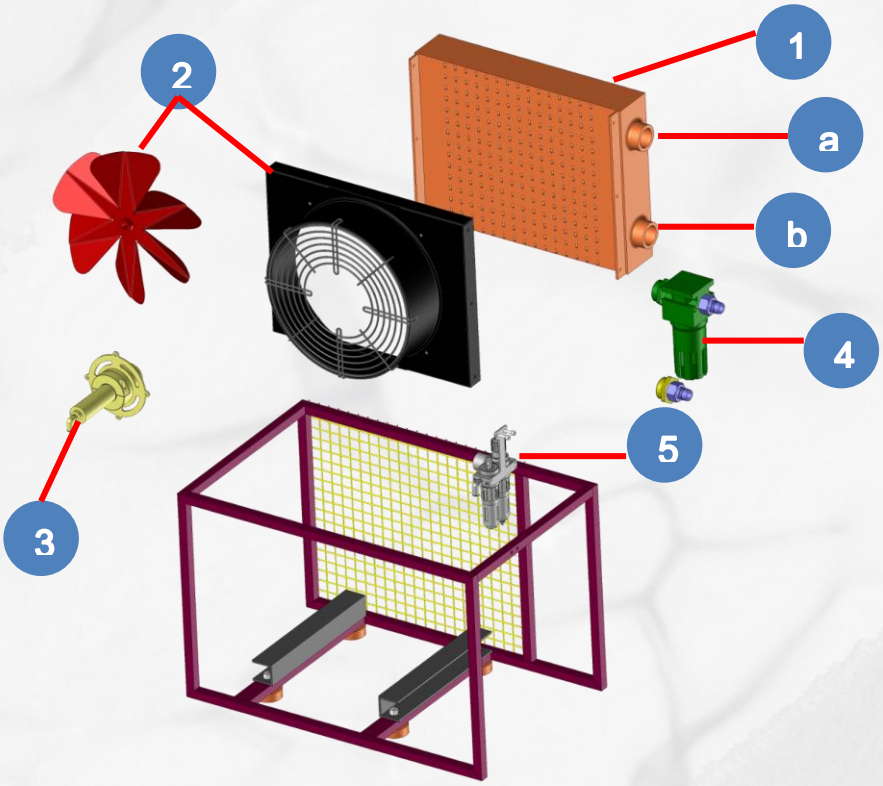

1) Radiator
a) Air in
b) Air out

2) Propeller and propeller body

3) Air Motor

4) Filter

5) Air regulator

HOW TO USE AIR COOLER?

First, the air from the compressor is directed through the filter through the air inlet to the radiator.

The air that cooling in radiator exits from air outlet and it is ready for using at the machine.

There are two air pipes for running to air motor. The first pipe (from 4 to 5) transfers the air to air regulator.

The air that lubricating in regulator transfers to air motor through the second pipe (from 5 to 3).

CABLE FLEETER

The Trailer Mounted Cable Fleeter replaces the manual handling for "figure eighting" cable and gives extra protection and security to the cable. Following deployment of the cable in the first leg of duct route the balance of the cable is taken out from the drum and took care of into the Fleeter, thereby delivering the cable end ready for blowing into the second leg.

The Fleeting machineenables a smooth and simple system while assuring the cable safety from pedestrians or vehicles and prevents contamination from mud, soil or dust.

The Fleeter is built to operate with the cable blower, which delivers cable supply within and outside of the Fleeter.The unit hosts (3,000 meters) of (13mm) cable, allowing drum lengths of (6,000 meters) to be utilized.The Fleeting machineis made of a road going trailer chassis on which is mounted a cable storage cassette, rotating cable guide quadrant and duct clamp assembly.

TECHNICAL DATA

Drum Diamter Max.	1600 mm
Drum Diamter Min.	800 mm
Tyres	145 R10
Length	3420 mm
Width	2300 mm
Height	2330 mm
Weight	325 kg
Weight with Box	420 kg

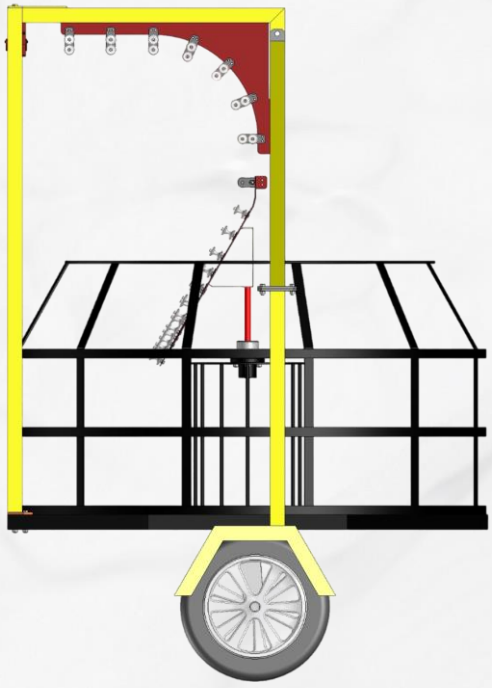

CABLE FLEETER's FEATURES

- Brakes: Interia type brakes with autoreverse
- Towing Hitch: Eye – 30mm, 40mm, 50mm
- Ball Type – 50mm

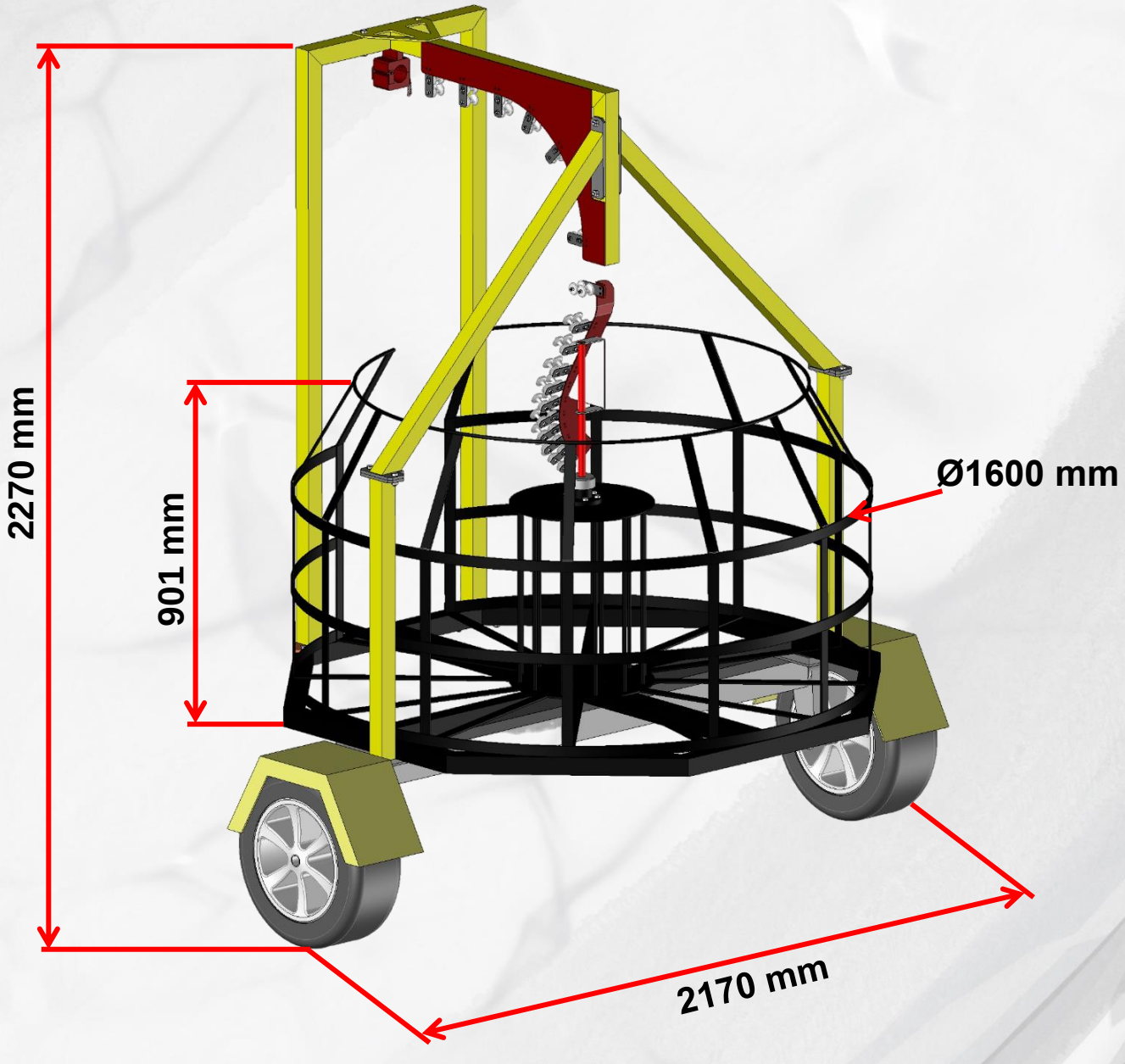

HOW TO USE CABLE FLEETER

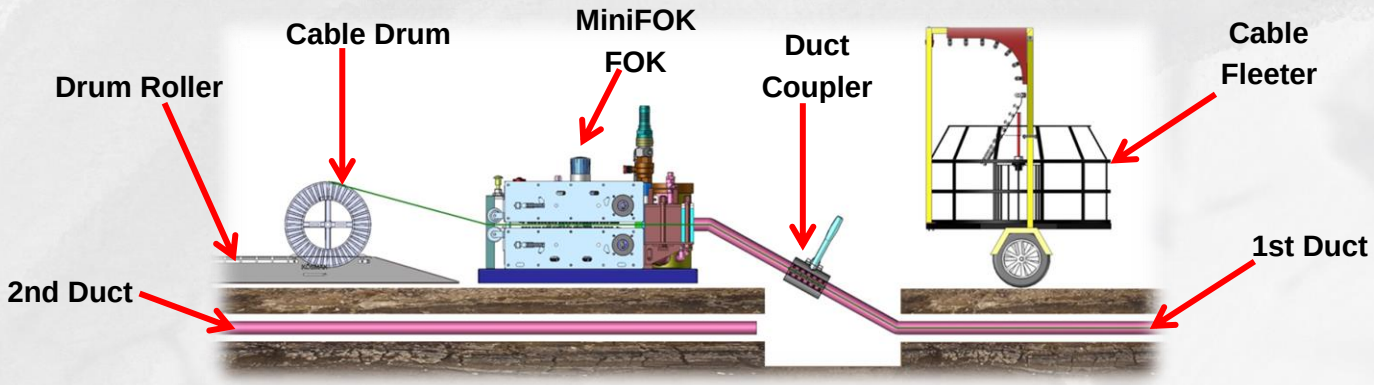

We have; Cable Drum having 2km of fiber cable,FOK Machine or Mini-FOK Machine, Duct Coupler,Cable Fleeter.

- 1st first step, We install 1km Fiber cable into first duct

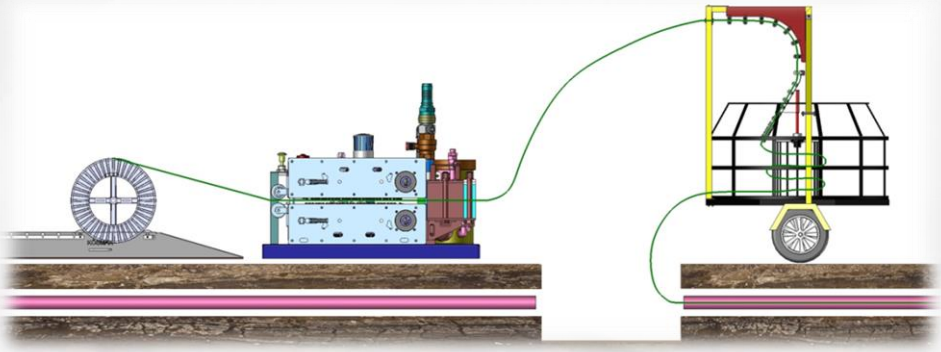

- 2nd step, We un-drum remaining Fiber Optic cable into Cable Fleeter.

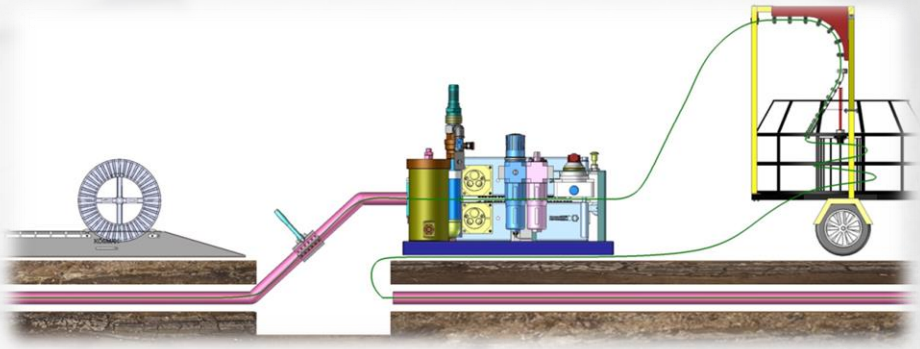

- At 3rd step, We install the fiber optic cable - that we have un-drumed into Cable fleeter on the step step- into second duct.

- Finally, 2km of fiber cable is deployed into both of the ducts.

DUCT COUPLER

Carbon steel split **Duct Coupler** is hinged and for temporarily coupling all types of innerduct during the cable blowing process. The wing nut makes it very easy to quickly assemble and to disassemble the leading section of innerduct before and after blowing fiber.They are used for installation Fiber Optic Cable with cable blowing machine to connect the underground install duct to couple with loaded ducts. **Duct coupler** is made of high-grade carbon steel raw material that can stand against environmental difficulties such as fungus attacks and corrosion. Very easy to use at trench depths or manholes. You don't need any spanners.

Standard Size available are at Ø20, Ø32, Ø40, Ø50mm, and can be customized upon request.

Features

Small and light
Allows access to very narrow chambers
Easy transportation
Easy maintenance
Easy manipulation (possibility to use it in both directions)
No nut, no losing them in trenches

Why to use a Split Innerduct Couplers

There are two advantages of Duct Coupler. One of them is that you spend much less time in coupling the ducts compared to plastic tools. The other advantage of Duct Coupler is that you can re-use these devices with no limitation. However standard plastic pipe coupler devices take too much time and you cannot remove it from the cable without cutting or breaking them that is highly cost in long term. Our steel **Duct Coupler** is designed cope all these difficulties. You will work much more efficient with these tools and less costly.

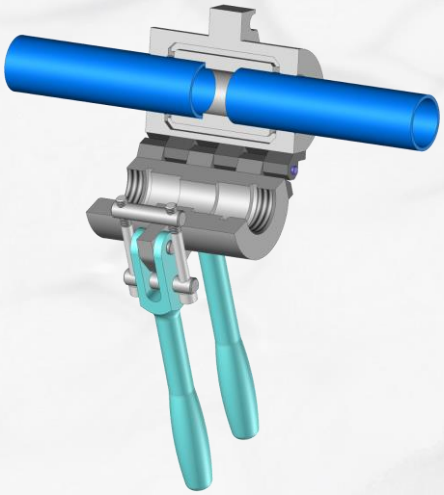

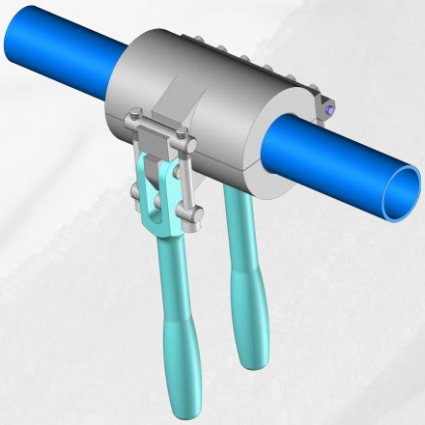

How to use Duct Coupler

Super easy to it , Open the coupler,place the cable from both sides. Tighten the couplers and start installing

CABLE DRUM ROLLER ON BEARINGS

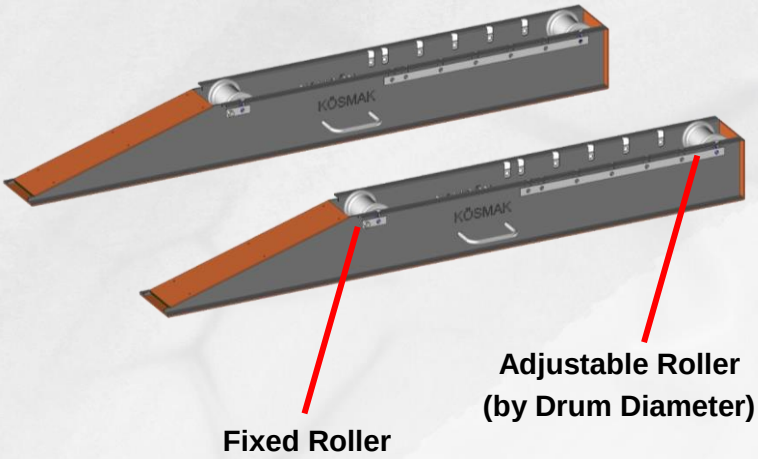

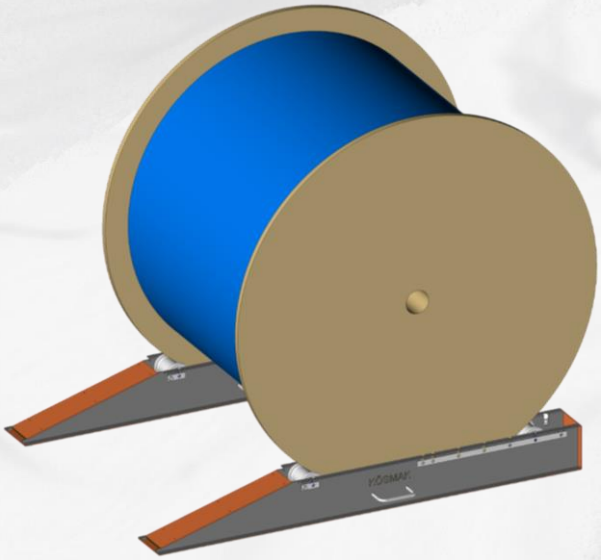

Cable Drum Roller on Bearings is the tool for Rolling cable on it. You can use **cable drum roller** for different drum diameters and different widths. You shall change the place of rear roller to use machine for different cable drums. You can use **cable drum roller** for drums from Ø400mm dia to Ø1500mm diameter. It is handy structure allow you to to carry on your hand. This robust heavy duty adjustable **cable drum roller** set (also known as a wire drum roller) is ideal for despoilingand recoiling various cables during installations. **Cable Drum Roller** is manufactured from heavy duty fabricated painted mild steel and uses heavy duty rollers (which are also adjustable) to ensure any size drum should fit. Ramp entry and exit eases the loading and unloading of drums onto the rollers themselves.

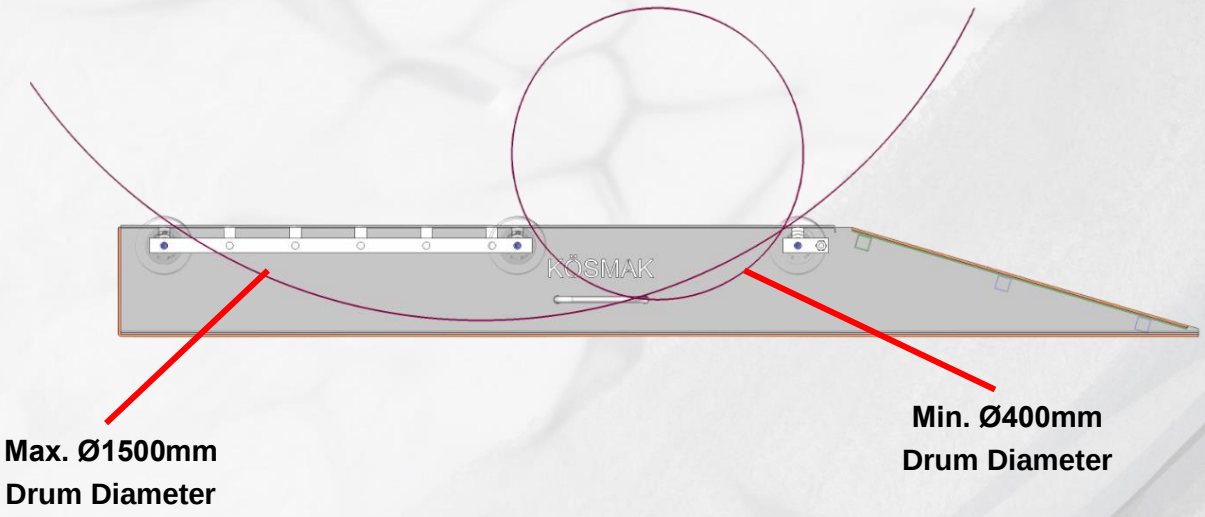

CABLE DRUM ROLLER ON PIPE

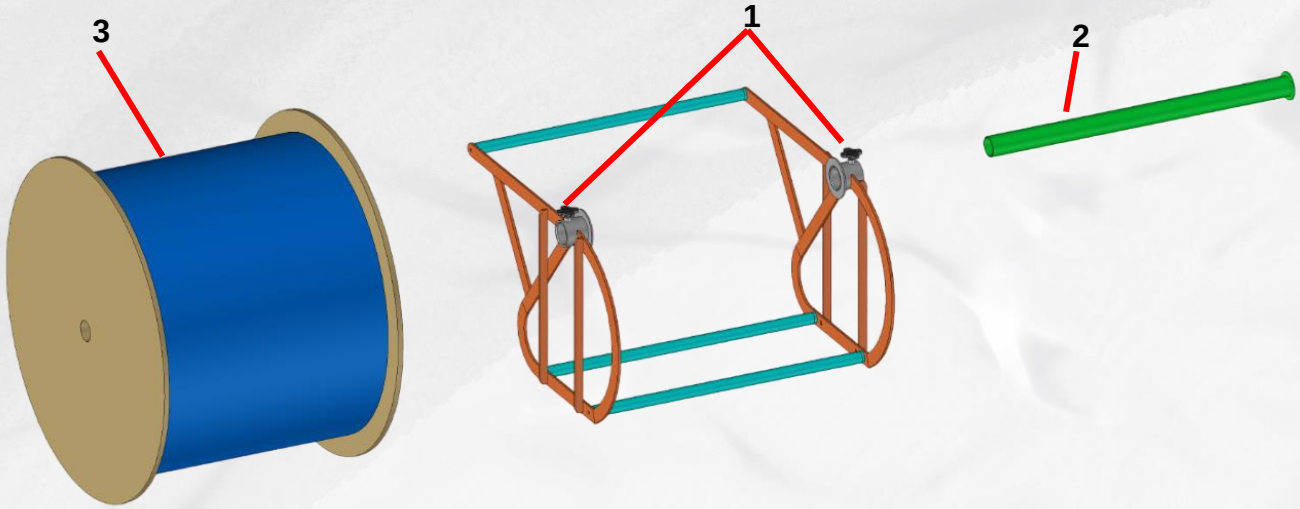

This product is new type of “Cable Drum Roller on Bearings” with it’s new name that “**Cable Drum Roller on Pipe**”. It does same work with “Cable Drum Roller on Bearings”. “**Cable Drum Roller on Pipe**” is easy to use than “Cable Drum Roller on Bearings”. You can use “**Cable Drum Roller on Pipe”** for drums from Ø300mm dia to Ø1300mm diameter without any adjustment required.

How to Use “Cable Drum Roller on Pipe”?

Mounting the Drum

- Loosen the grips (figure 1)
- Remove the Pipe (figure 2) outside
- Put on the Drum between two orange body
- Put the Pipe back in place
- Tighten the grips again.

After this steps; The Drum Roller will be ready to use.

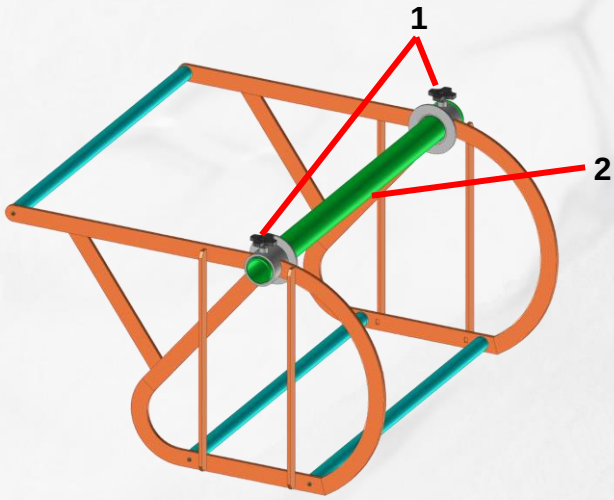

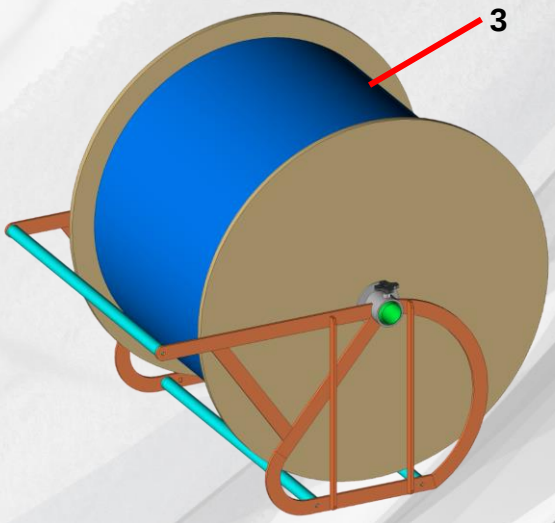

Y-CONNECTOR

The Single size junction box consist of an polyamid base and cover that structure a pressurized air chamber into which one finish of a current involved inner duct can be appended. The current cable can leave the case through an exit hole that has 3 cable seal spaces, one of which will house the seal to suit the size of the current cable. The third branch is then associated with a Cable Blowing Machine through a short slave length of inner duct for the deployment of the additional cable or tube(s). Required seals should be provided as the **Y-Connector** doesn't include any accessories in shipping configuration.

Y-connector is a cable blowing accessory for over blowing existing cable in a ductwith a cable blowing machine. In case of there is a cable already blown into duct you can blow another one or you can blow thethird cable.

Without **Y-Connector** over blow device you can not increase cables as you cannot prevent air leaks. You can use this tool for different ducts and cables by cable seals and nutrings that we will be supplied with the product as per your requirements. Required ducts and cable diameters should be stated separately.

Y-Connector jetting tools are engineered to optimize the space in an existing occupied duct and enable you thedeployment of a 2ndcable, or multiple micro-ducts while blowing the Fiber Optic cables.For cables Ø 4 to 22 mm and ducts OD 20 to 63mm.The blowing performance achieved with this device corresponds to around 50% of the one achieved with the first cable. This means that you will blow the second cable slower than the first one. One branch of the **Y-Connector** connected with the machine is utilized for feeding the second cable in the duct. Deployment distance accomplished with two extra cable is almost equivalent to the one got with one cable.

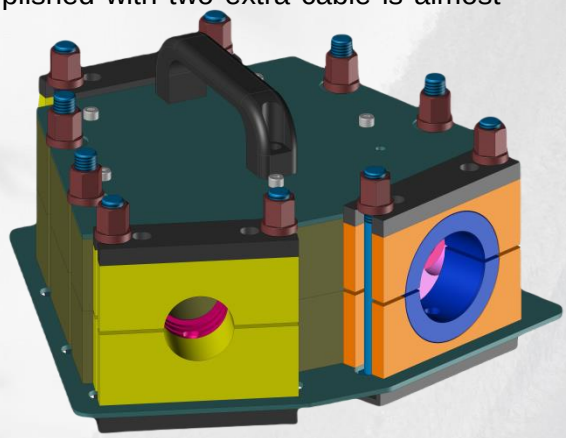

Features

1) Compact and light
2) Allows admittance to extremely small dia. chambers
3) Easy transportation
4) Easy maintenance
5) Easy control (allows you to use it in the two directions

TECHNICAL DATA

Standard Version	Y-Connector
Type	Standard
Cable Dia. (mm)	Ø4 – Ø22
Duct OD (mm)	Ø20 – Ø63
Max. Air Pressure (bar)	12
Packed in Wooden Case	Fumigated Plywood
Package Dimensions l x w x h (mm)	425 x 400 x 230
Total Net Weight (kg)	10,50
Total Gross Weight (kg)	15,40

HOW TO USE Y-CONNECTOR

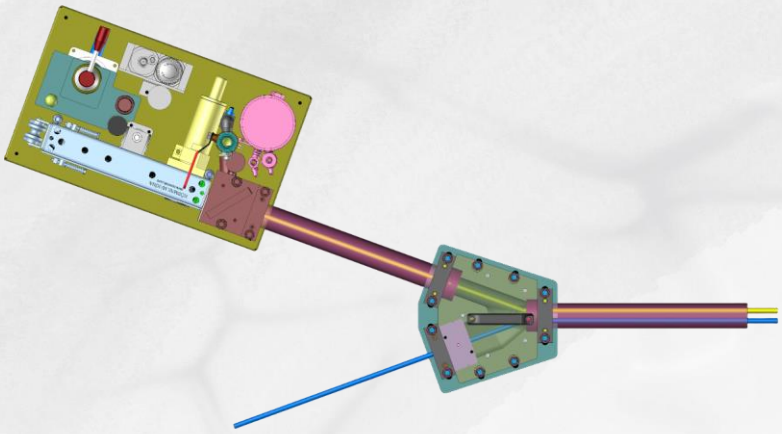

2 Cable Application

1 of cables is fixed and 2rd cable is blown by the help of Y-Connector

3 Cable Application

2 of cables are fixed and 3rd cable is blown by the help of Y-Connector

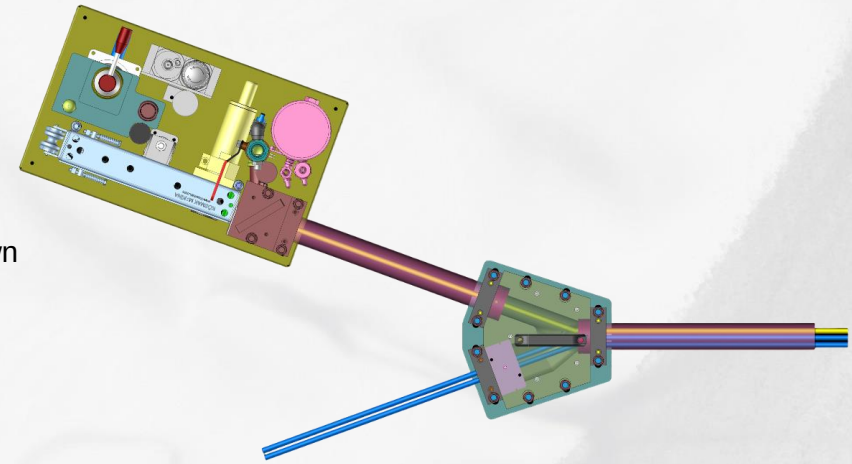

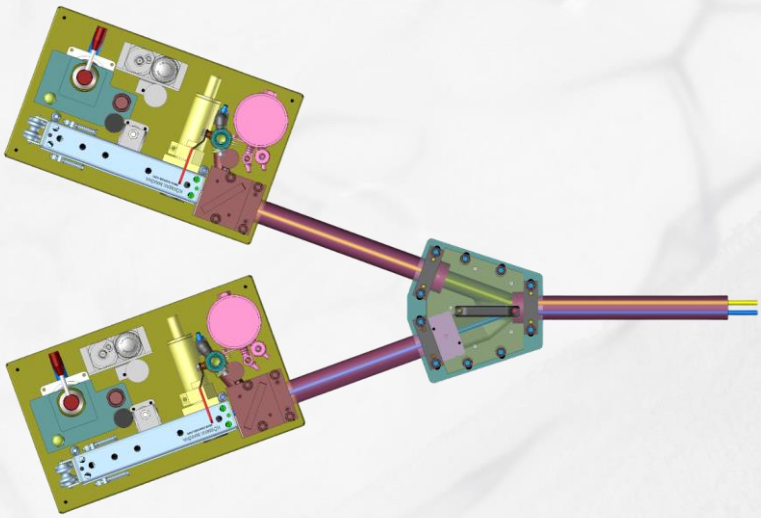

2 Cable & 2 Machine Application

2 cables simultaneously are blown by 2 cable blowing machines.
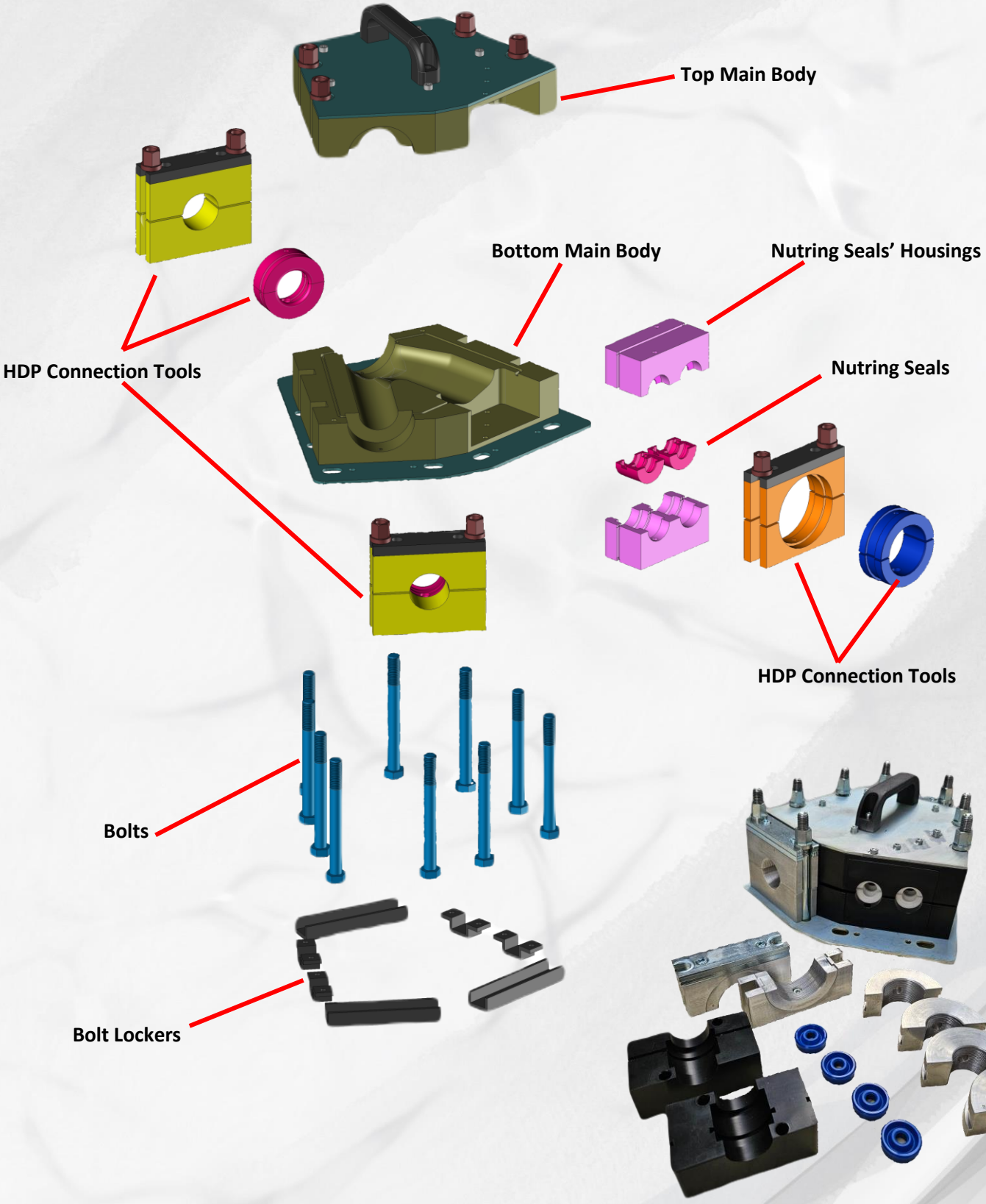
Y-CONNECTOR ACCESSORIES